20990063-01/02/03

BDSK Handels GmbH & Co. KG
Mergentheimer Strasse 59
97084 Würzburg / Germany
info@moemax.at

möma

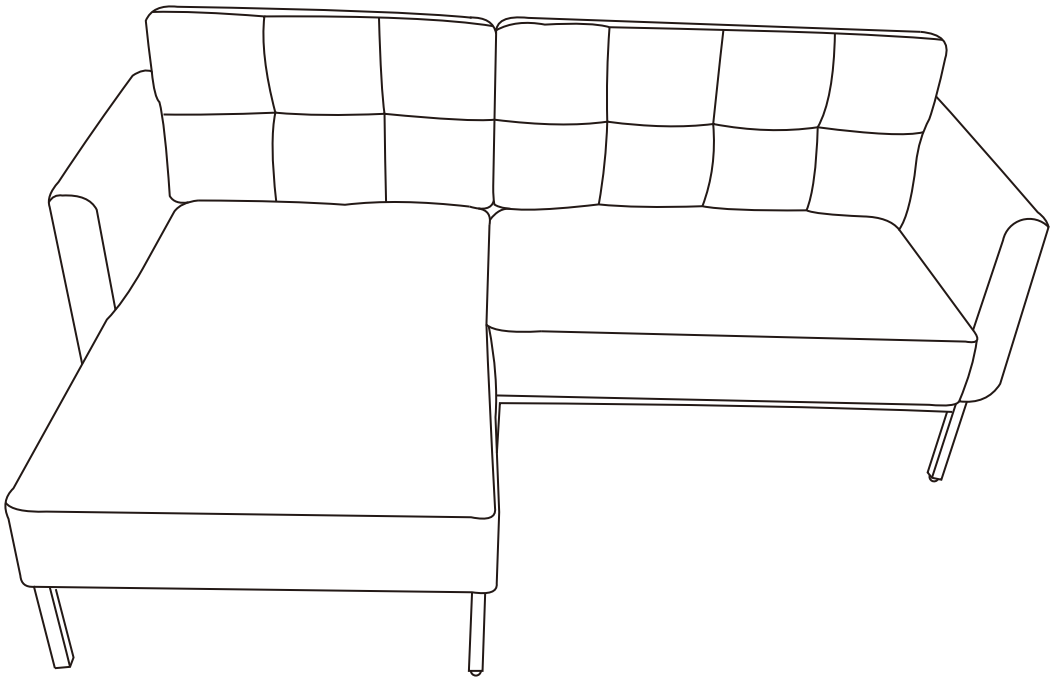











15Mins

22
PAP

A x1	B x1	C x1	D x1	E x1	F x1	G x1	H x1	I x2
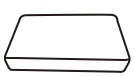		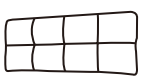	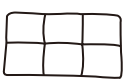				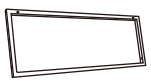	

J x10	K x17	L x7	M x4	N x4	O x10	P x2	Q x1	R x1
							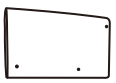	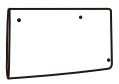



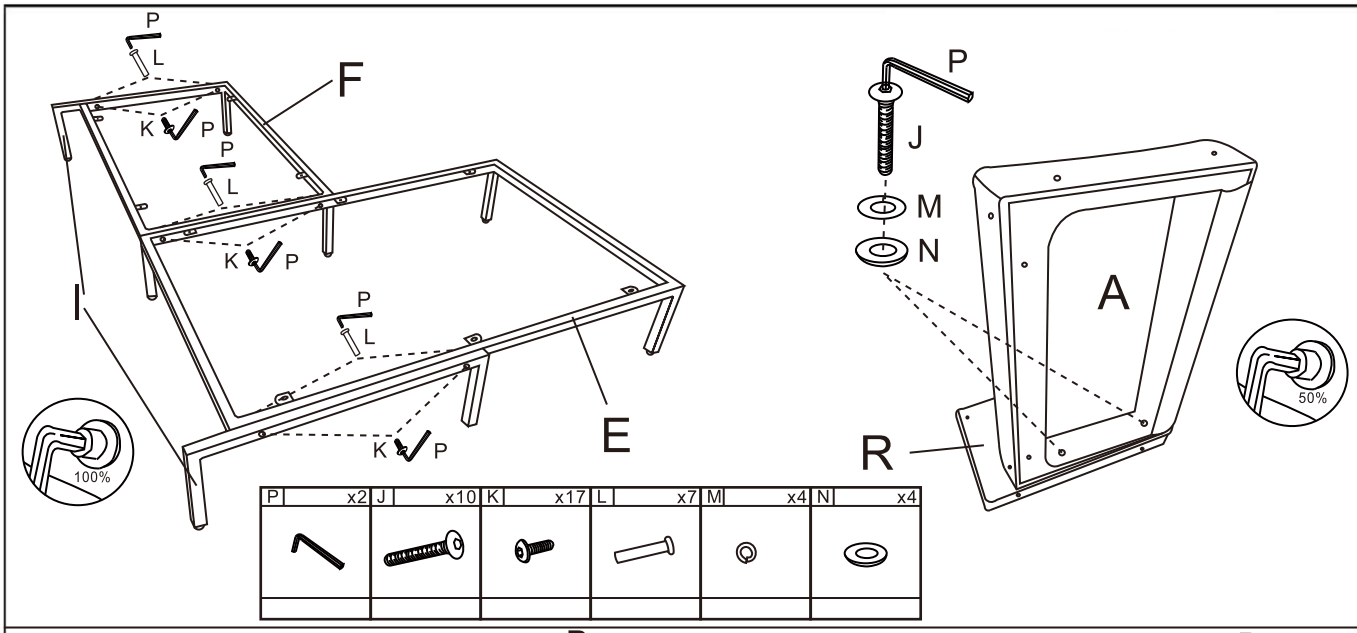

P x2	J x10	K x17	L x7	M x4	N x4

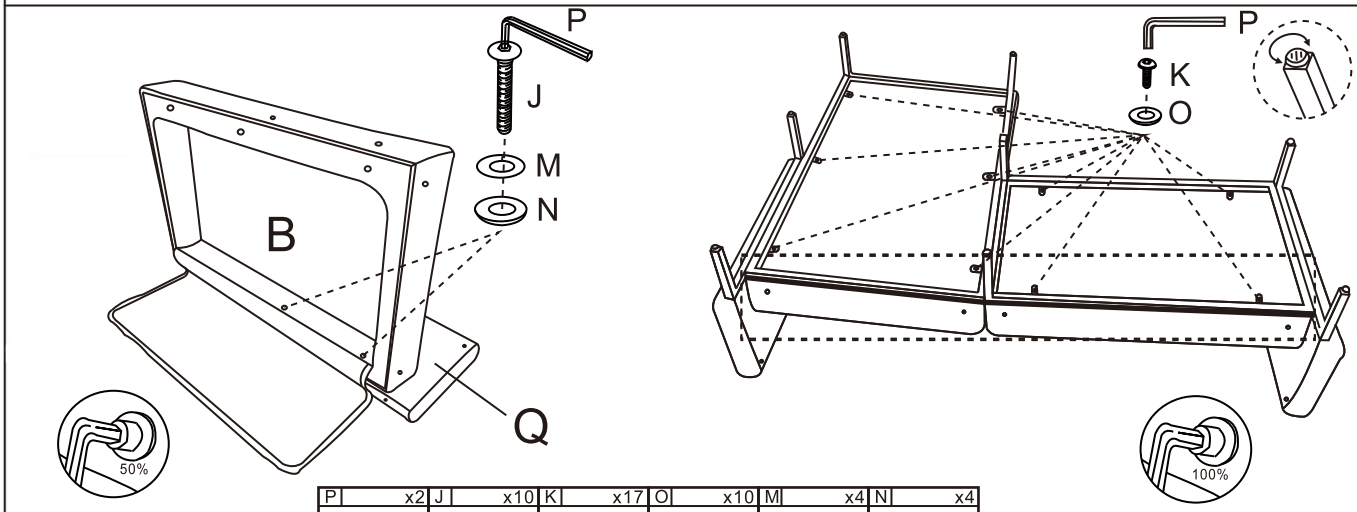

P x2	J x10	K x17	O x10	M x4	N x4

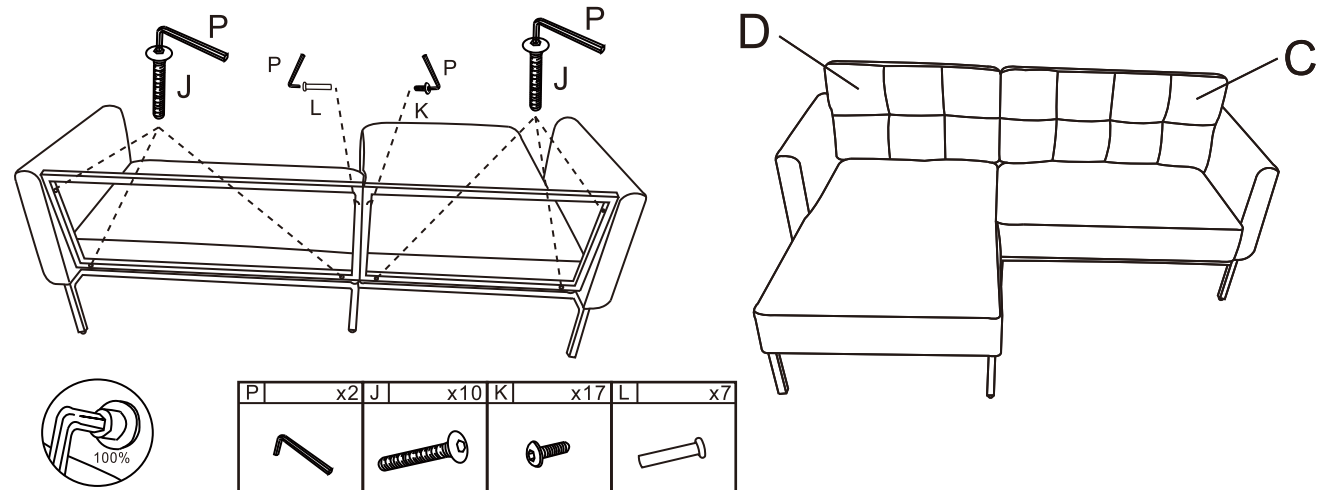

P x2	J x10	K x17	L x7



20990063-01/02/03

BDSK Handels GmbH & Co. KG
Mergentheimer Strasse 59
97084 Würzburg / Germany
info@moemax.at

möma

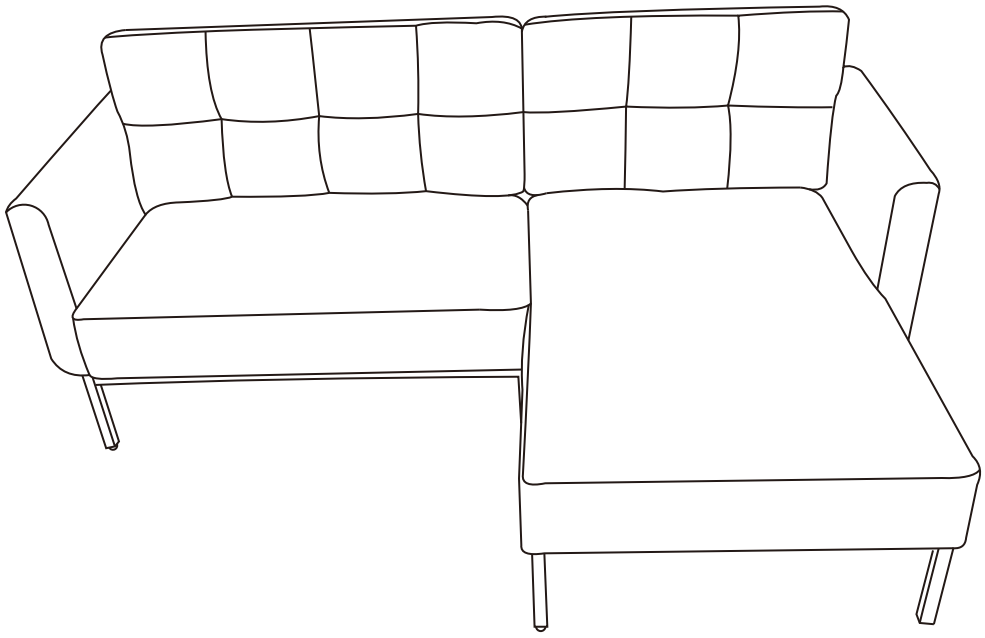











15Mins

22
PAP

A x1	B x1	C x1	D x1	E x1	F x1	G x1	H x1	I x2
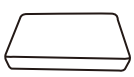		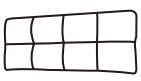	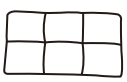				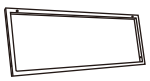	

J x10	K x17	L x7	M x4	N x4	O x10	P x2	Q x1	R x1
								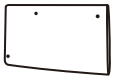



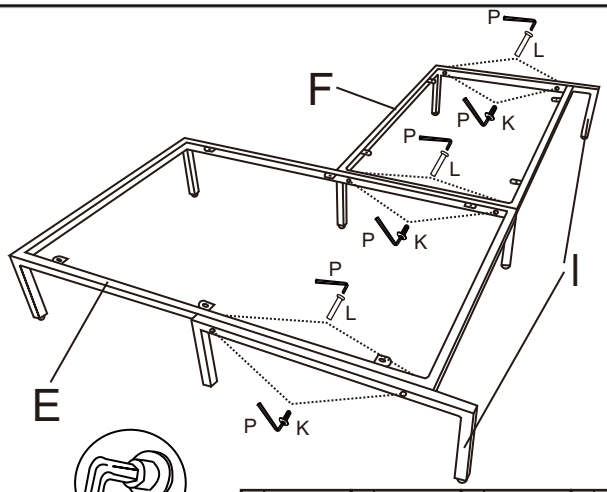

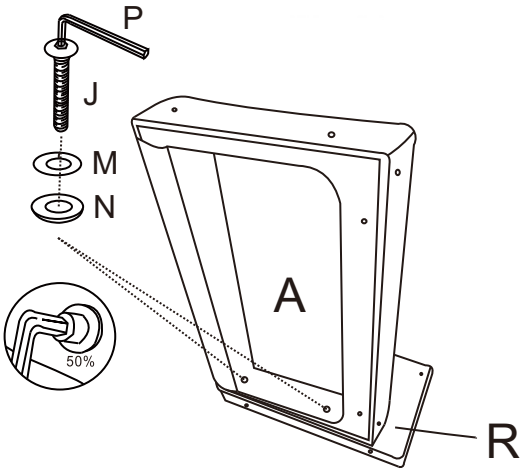

P x2	J x10	K x17	L x7	M x4	N x4

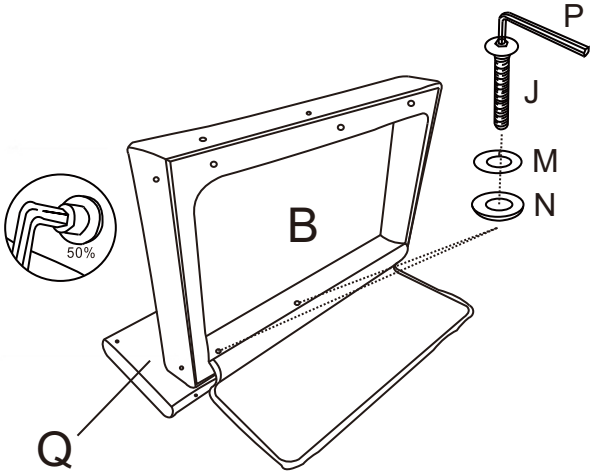

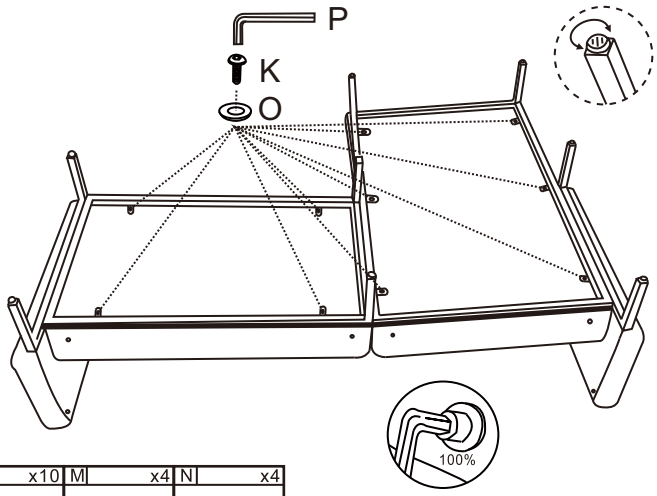

P x2	J x10	K x17	O x10	M x4	N x4

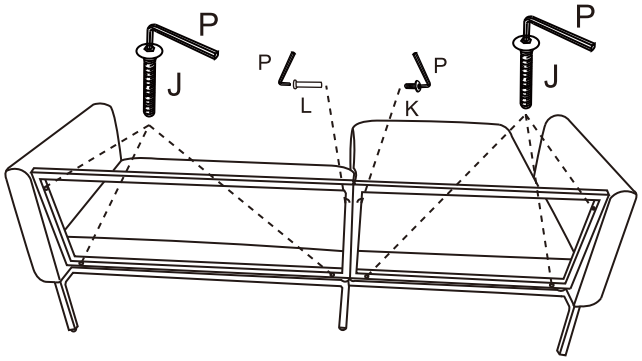

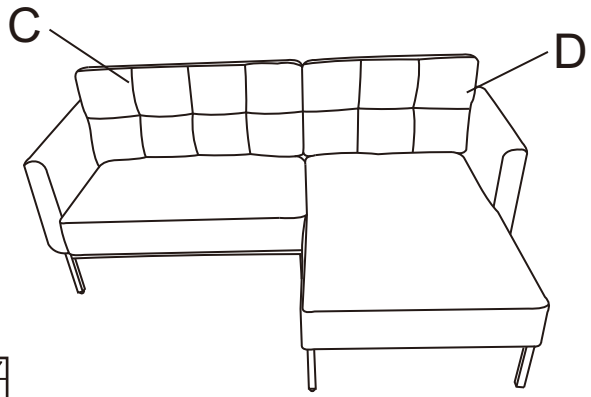

P x2	J x10	K x17	L x7

