Milos 6D1S

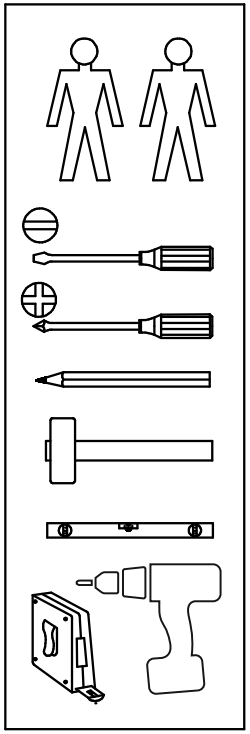

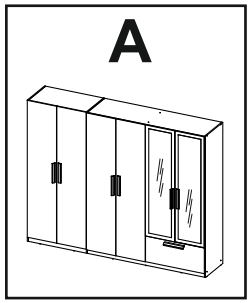

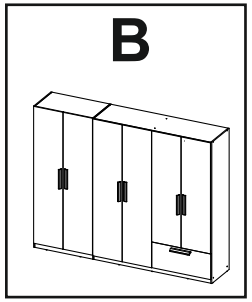

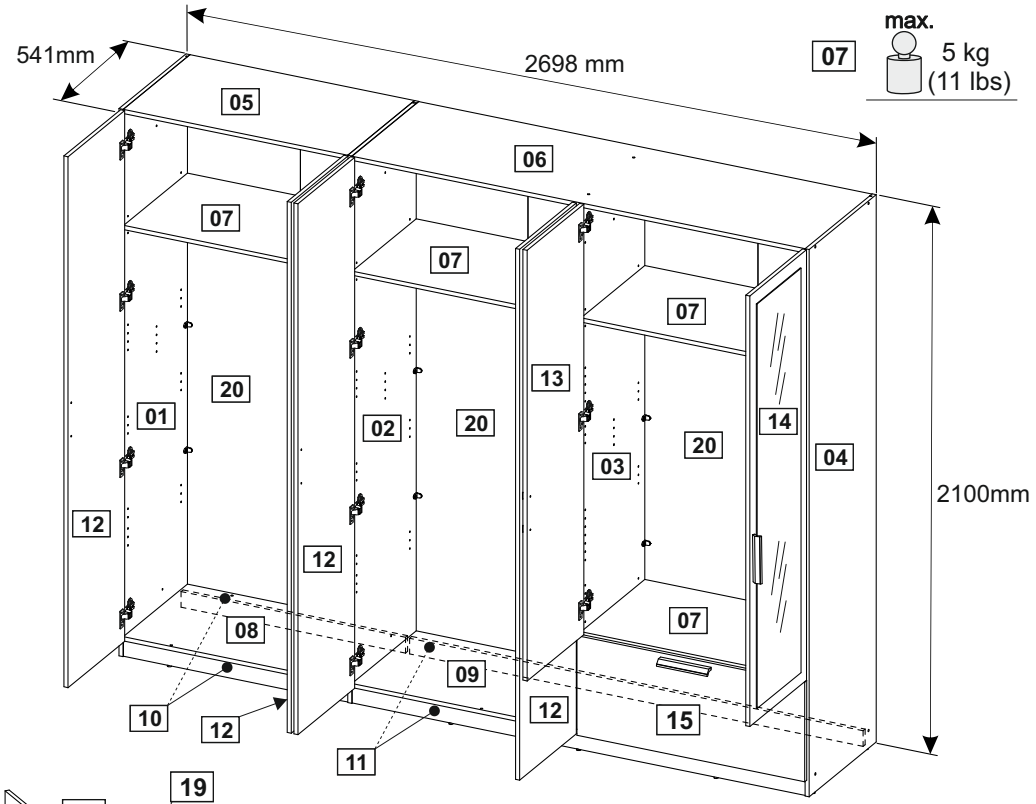

01	7028762	2095x524x16	x1	5/5
02	7028773	2095x524x16	x1	4/5
03	7028756	2002x522x16	x1	2/5
04	7028760	2095x524x16	x1	5/5
05	7028764	878x523x16	x1	1/5
06	7028771	1772x523x16	x1	2/5
07	7028740	878x500x16	x4	1/5
08	7028765	878x523x16	x1	1/5
09	7028768	1772x523x16	x1	2/5
10	7028767	878x60x16	x2	2/5
11	7028770	1772x60x16	x2	2/5
12	7028752	2032x443x16	x4	3,4/5
13	7028753	1648x443x16	x1	3/5
14	7028750	1648x443x16	x1	3/5
15	7028743	890x381x16	x1	1/5
16	3022225	450x200x12	x1	1/5
17	3022226	450x200x12	x1	1/5
18	3022227	846x200x12	x1	1/5
19	7028741	856x451x3	x1	1/5
20	7028757	2012x886x3	x3	5/5

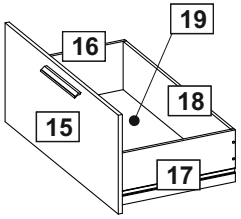

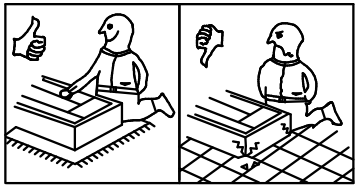

C 1/1

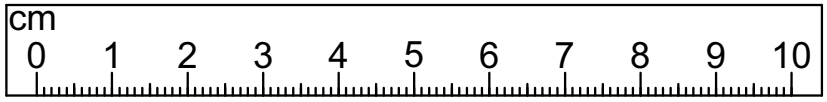

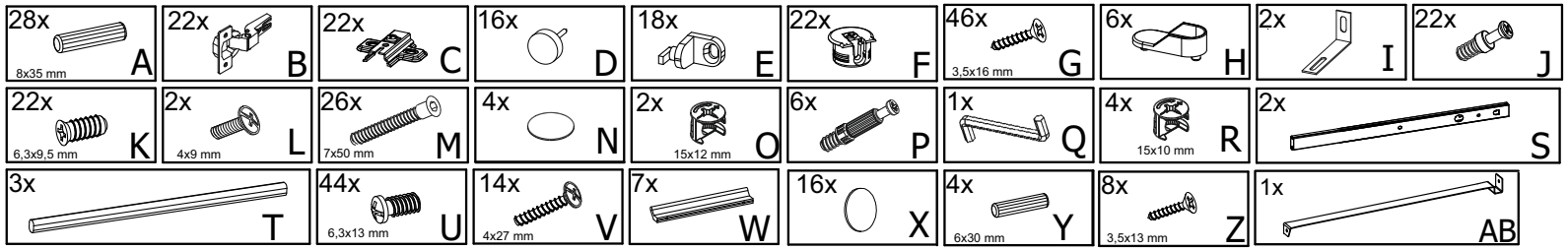

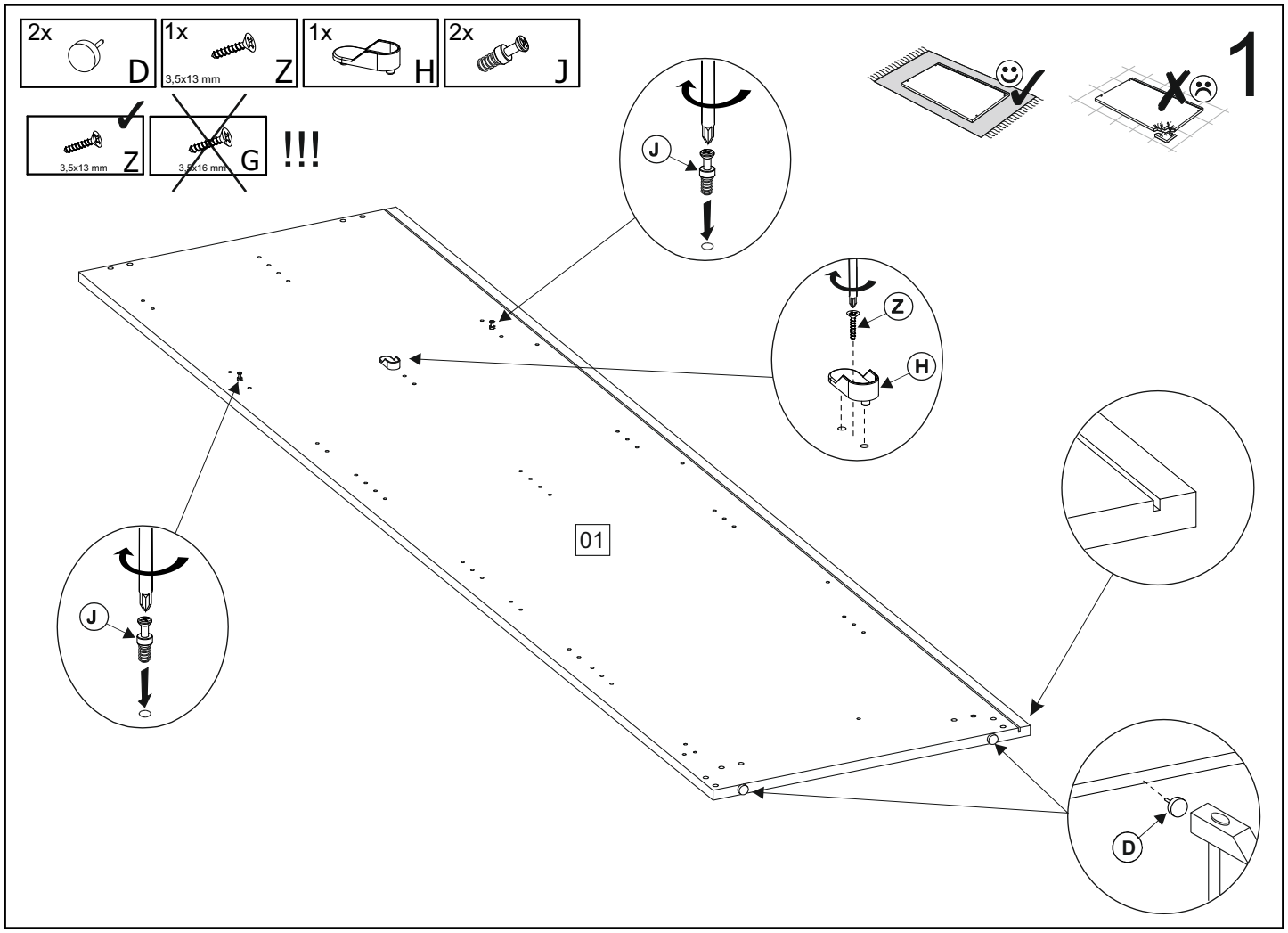
1
2x D
1x 3,5x13 mm Z
1x H
2x J
3,5x13 mm Z
3,5x16 mm G
!!!
J
Z
H
01
J
D

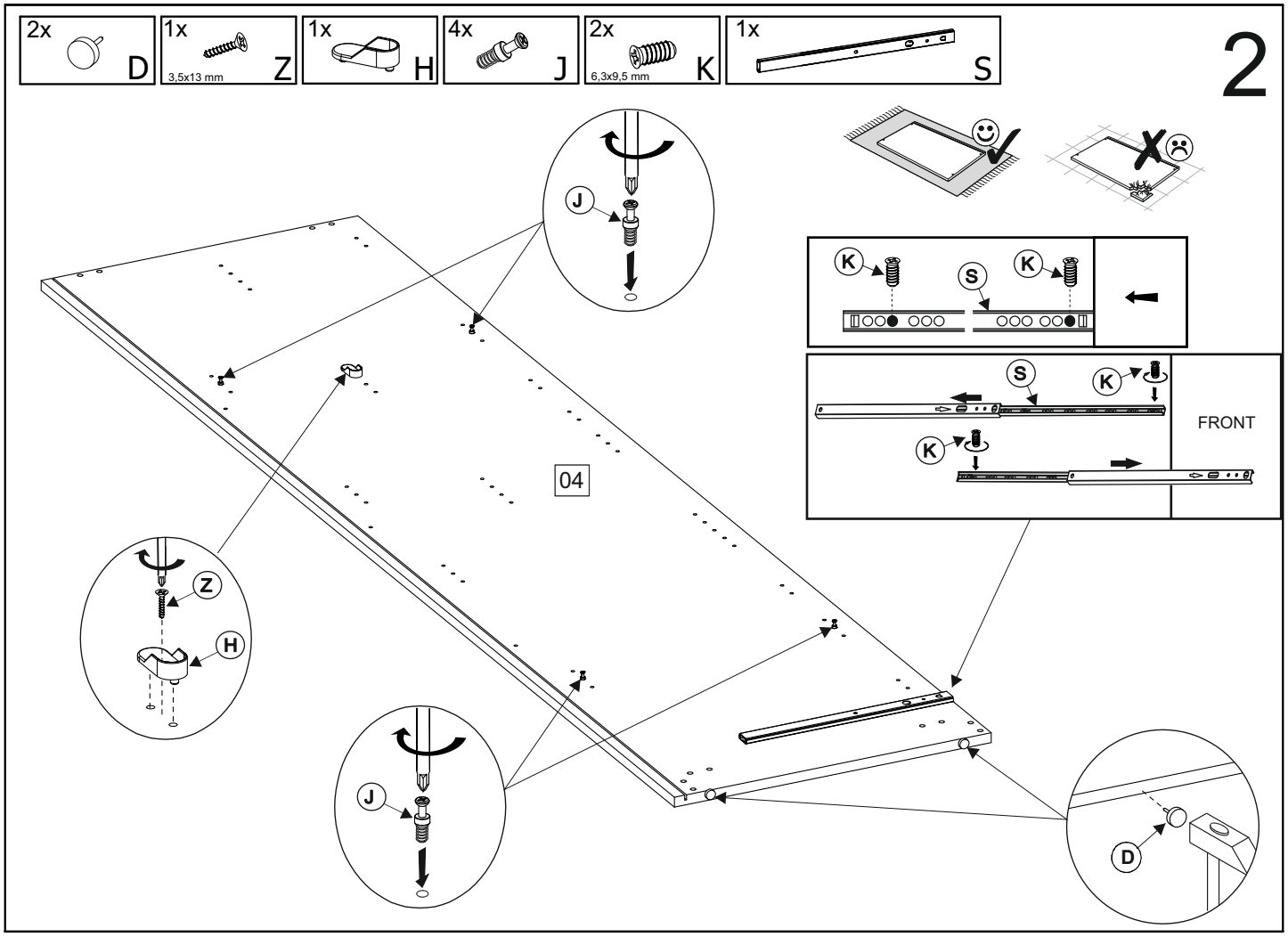
2
2x D
1x 3,5x13 mm Z
1x H
4x J
2x 6,3x9,5 mm K
1x S
J
K
S
K
S
K
K
FRONT
04
Z
H
J
D

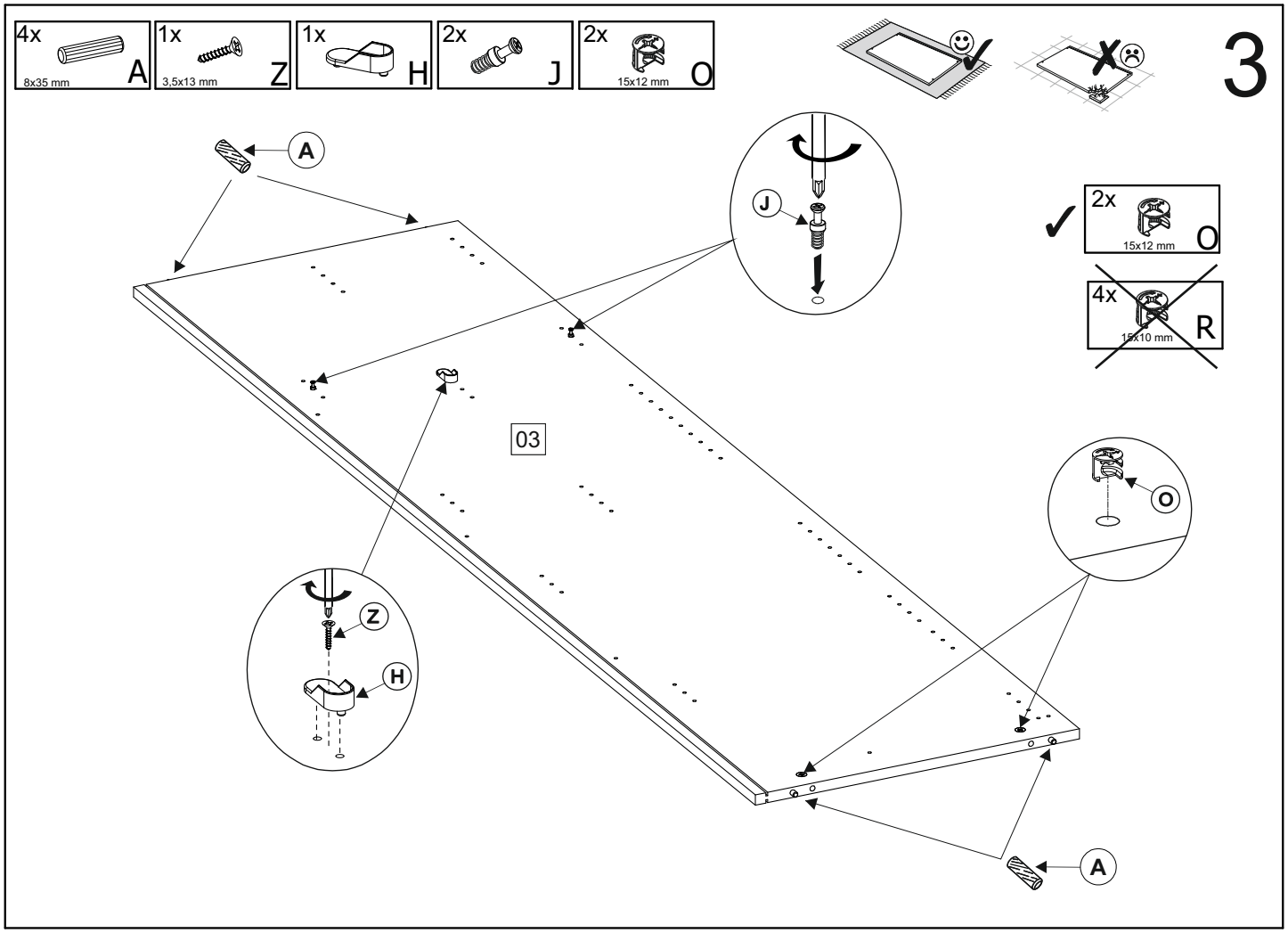
3
4x 8x35 mm A
1x 3,5x13 mm Z
1x H
2x J
2x 15x12 mm O
2x 15x12 mm O
4x 15x10 mm R
03
A
J
Z
H
O
A

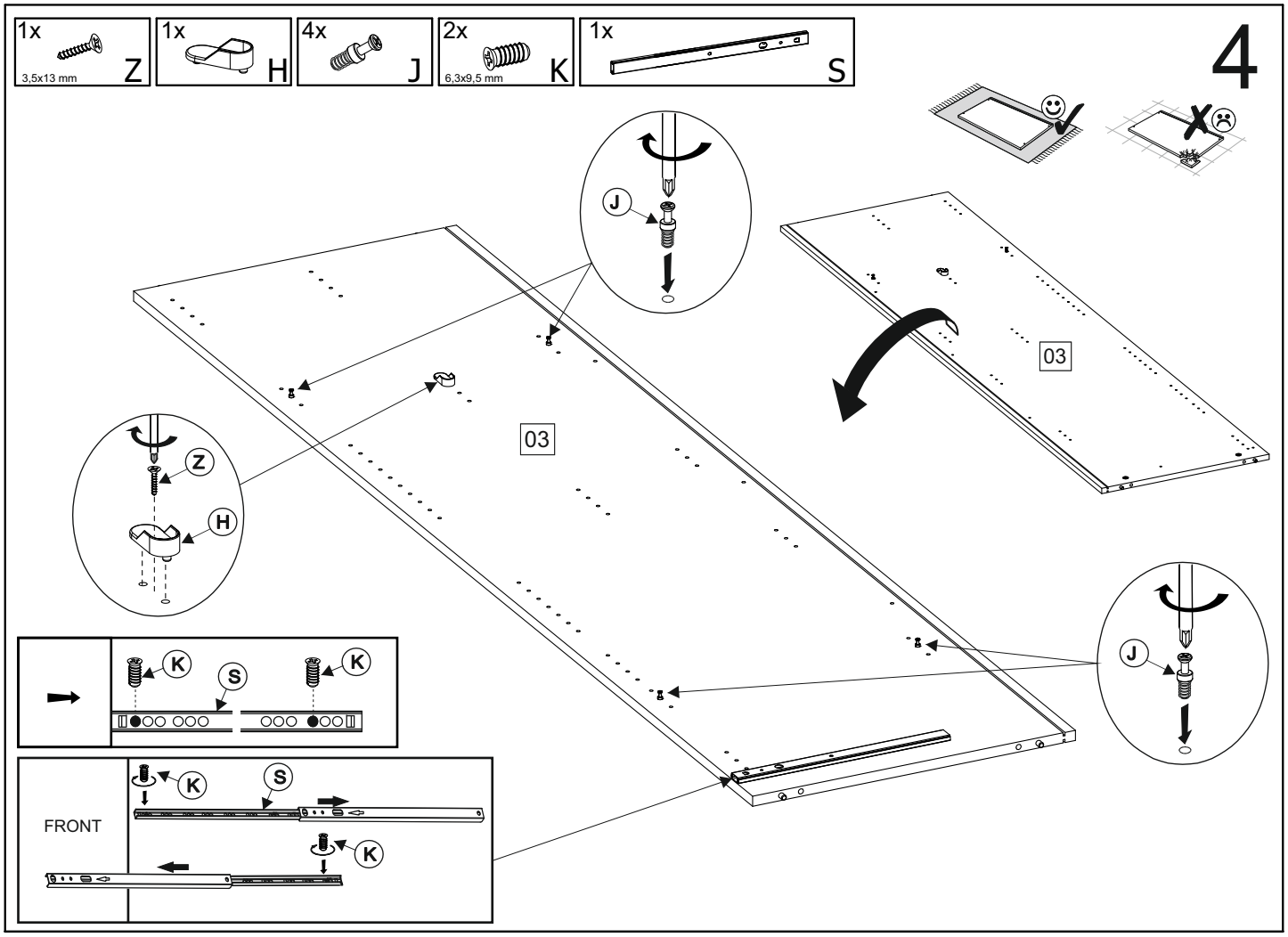
4
1x 3,5x13 mm Z
1x H
4x J
2x 6,3x9,5 mm K
1x S
03
03
J
Z
H
K
S
K
FRONT
K
S
K
J

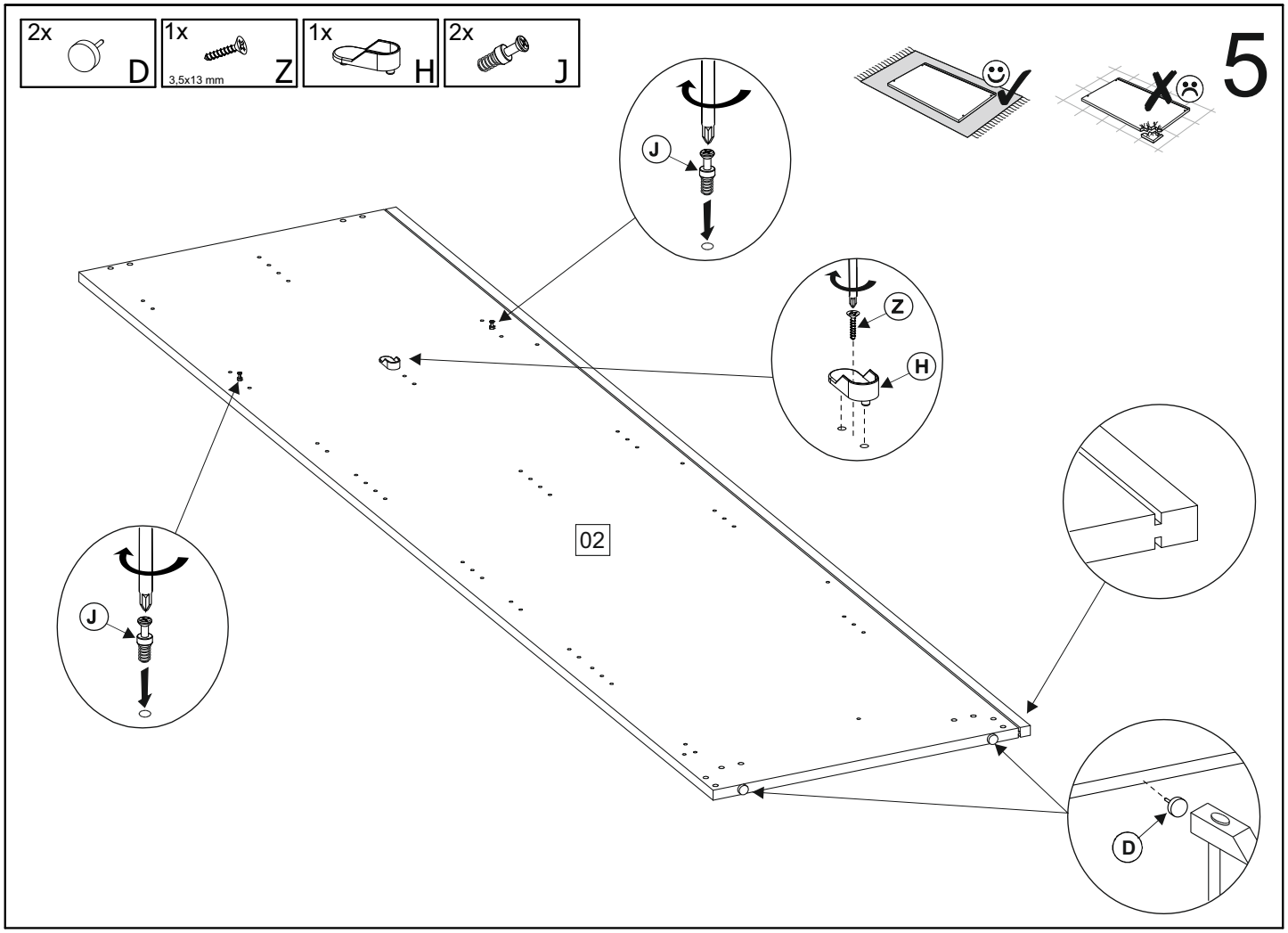
5
2x D
1x 3,5x13 mm Z
1x H
2x J
J
Z
H
02
J
D

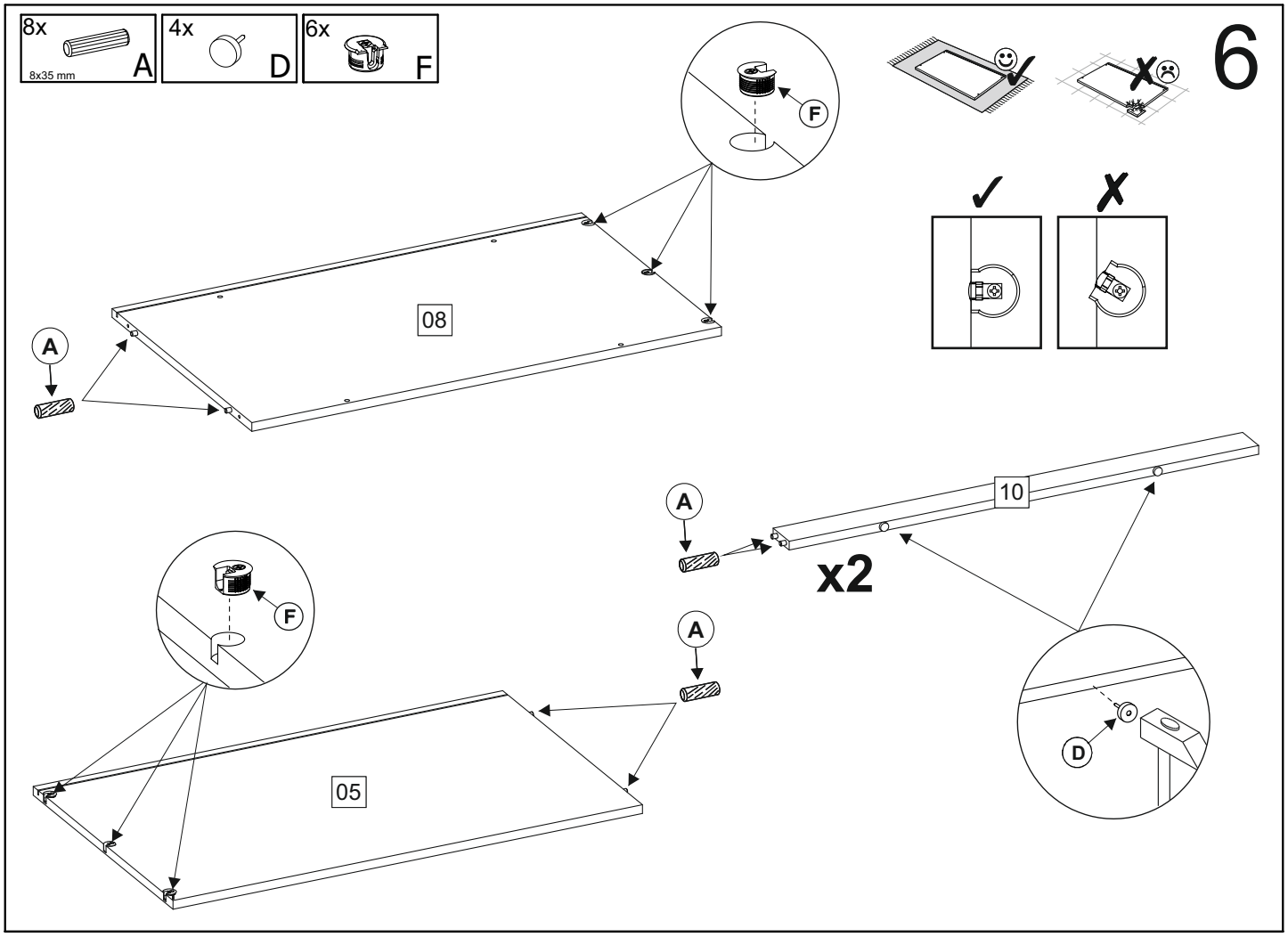
6
8x 8x35 mm A
4x D
6x F
F
08
A
10
A
x2
A
F
05
D

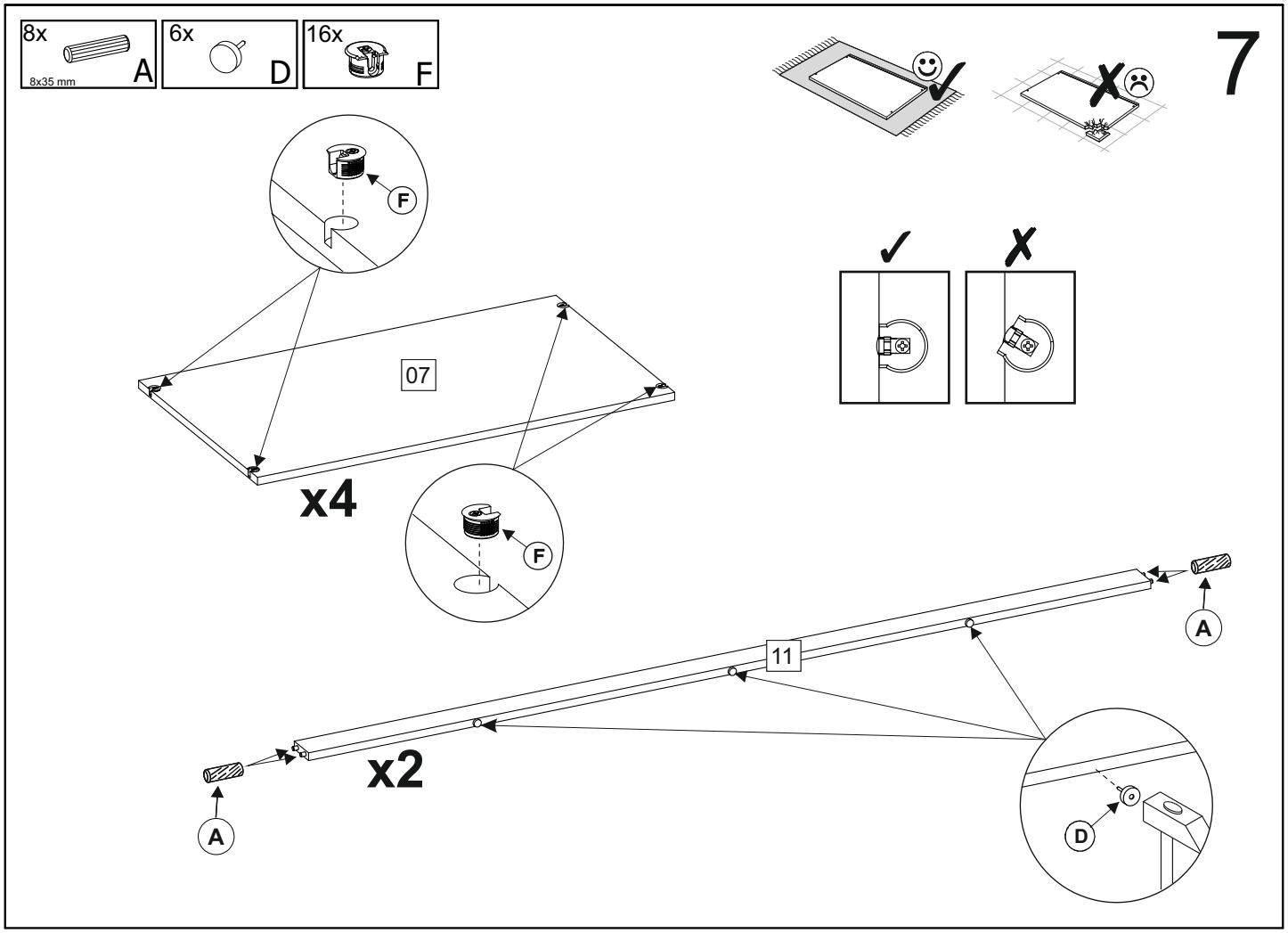
7
8x
8x35 mm
A
6x
D
16x
F
F
07
x4
F
11
A
x2
A
D

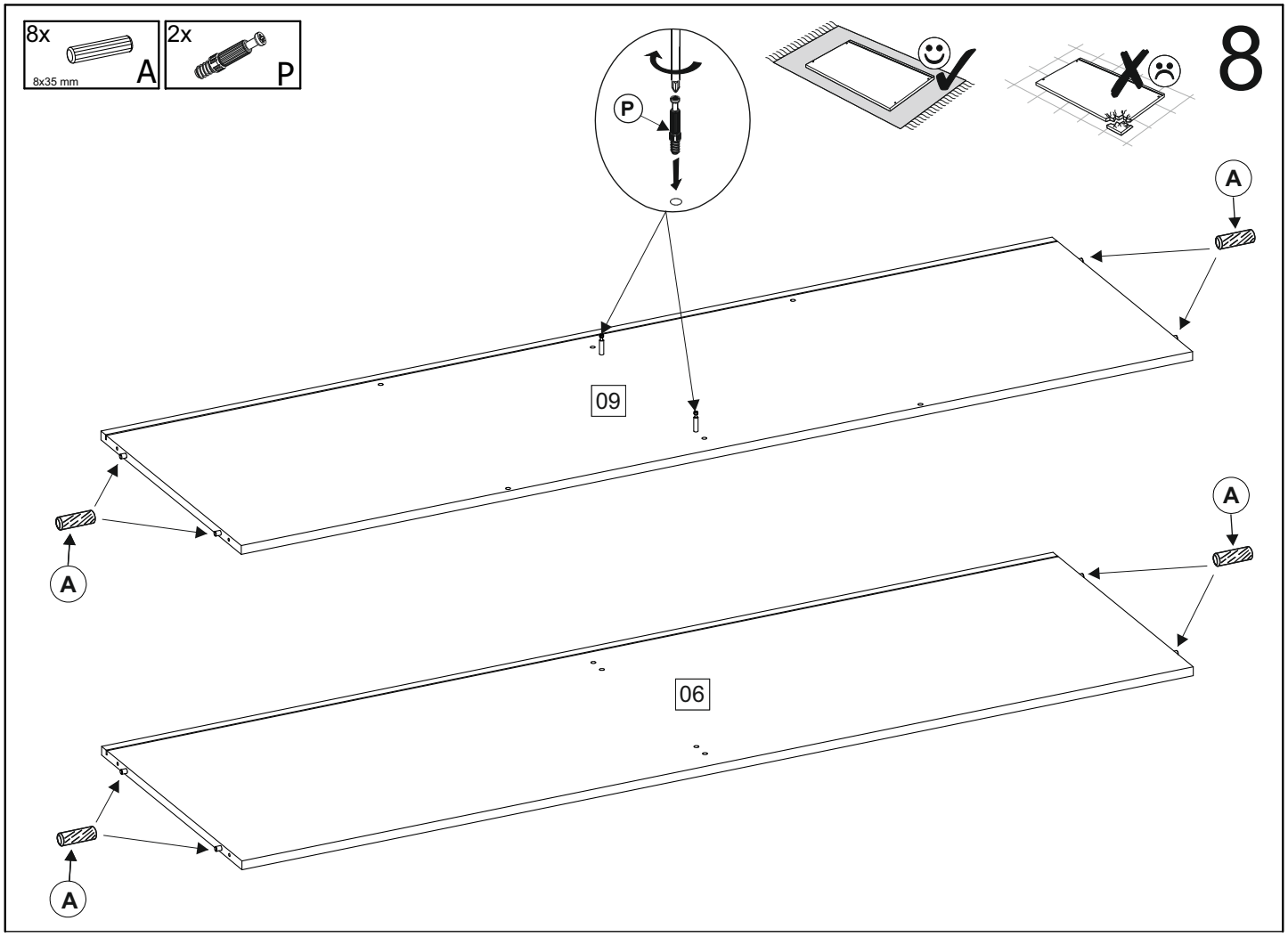
8
8x
8x35 mm
A
2x
P
P
A
09
A
A
06
A

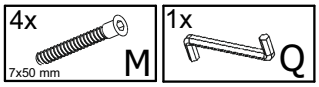

9

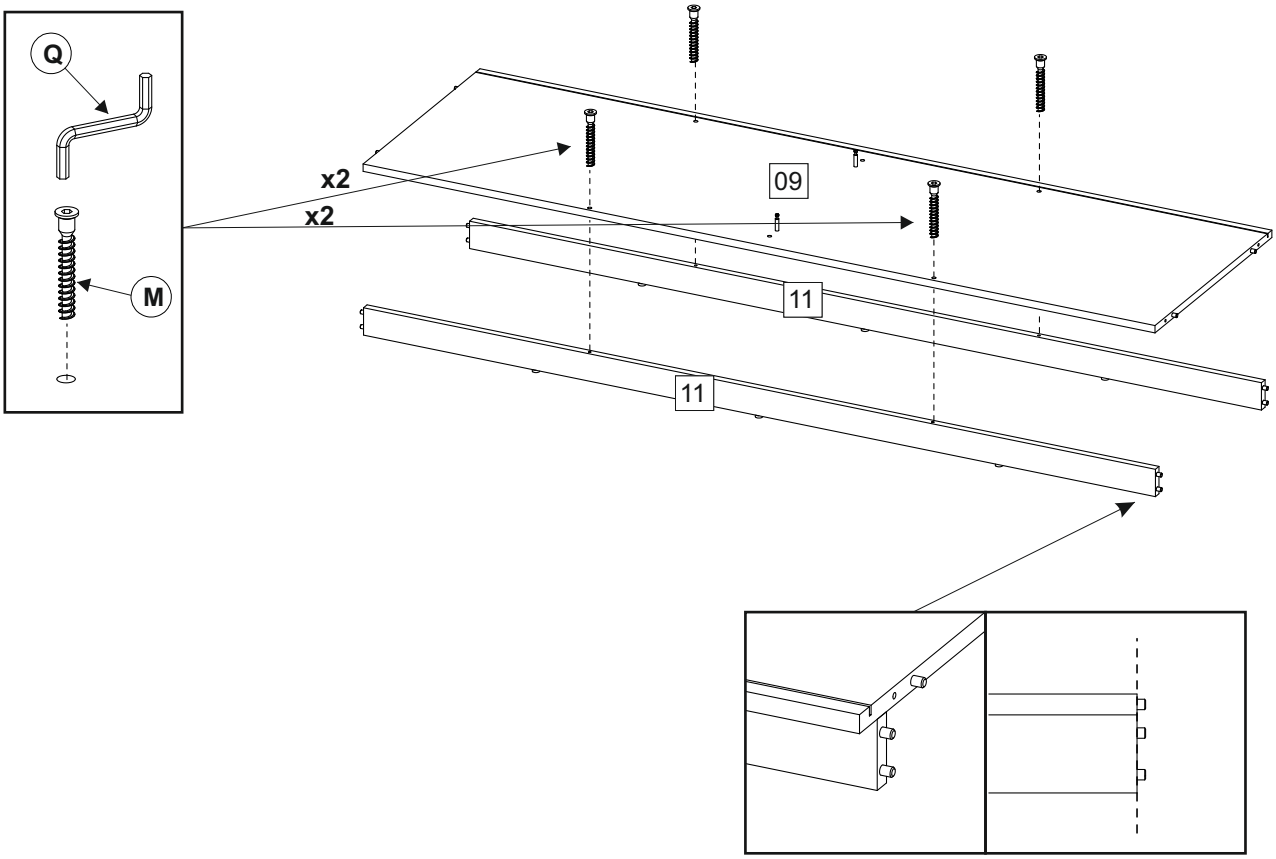

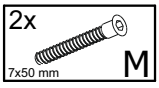

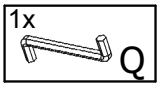

10

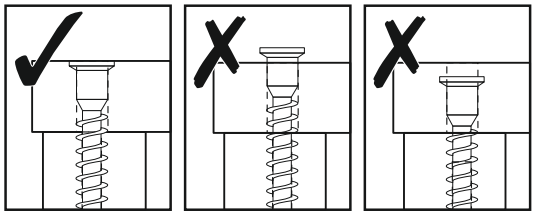

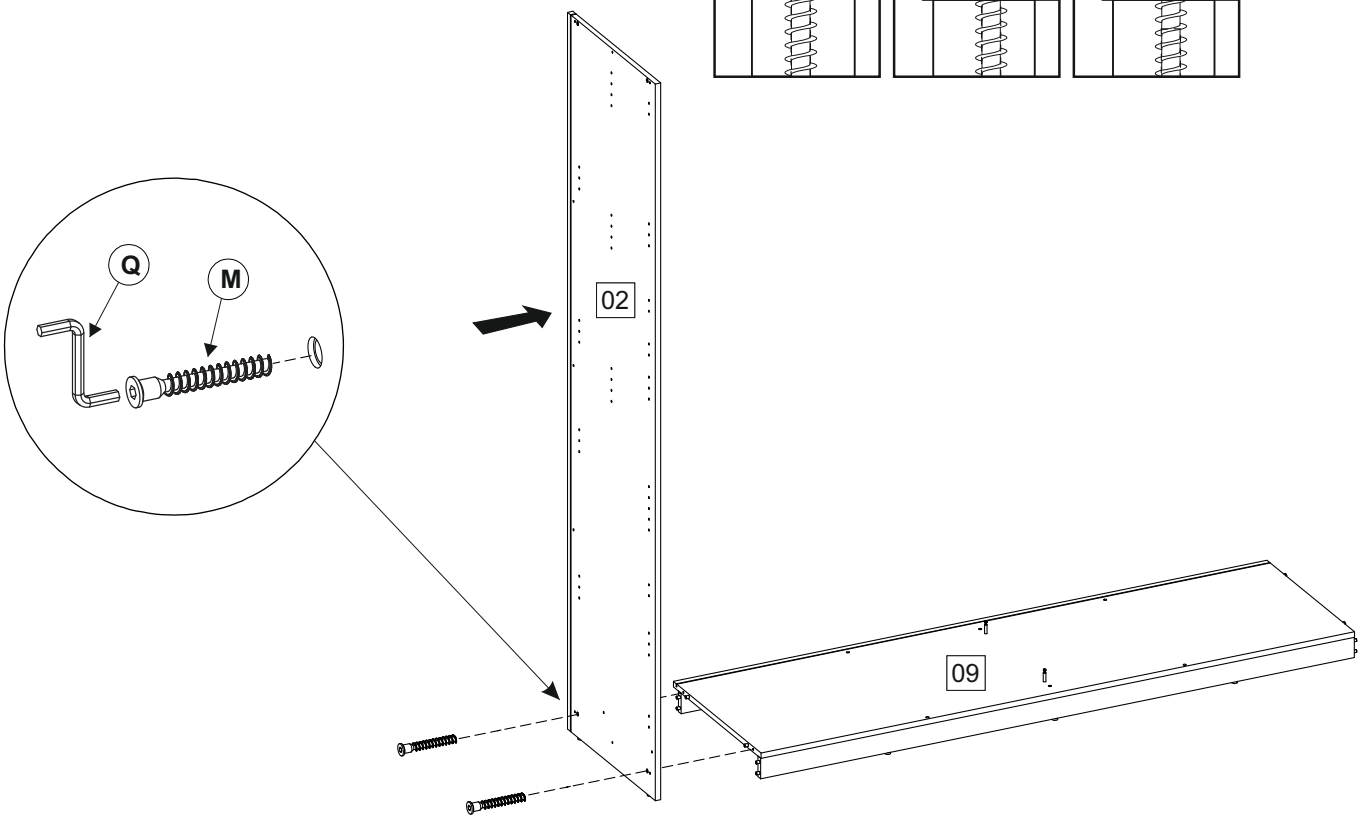

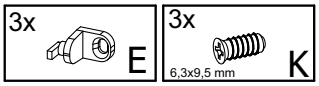

11

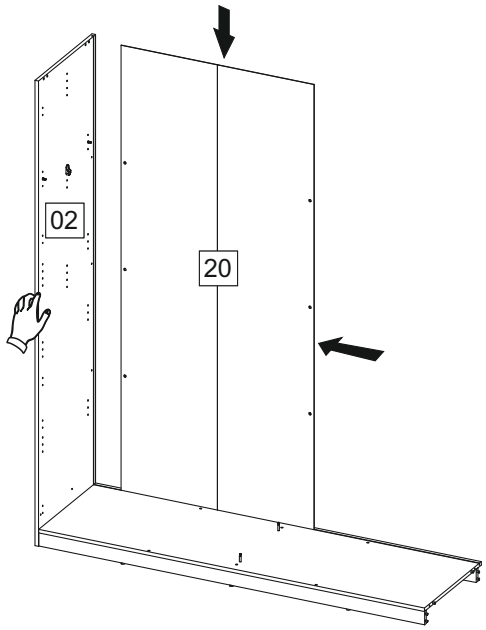

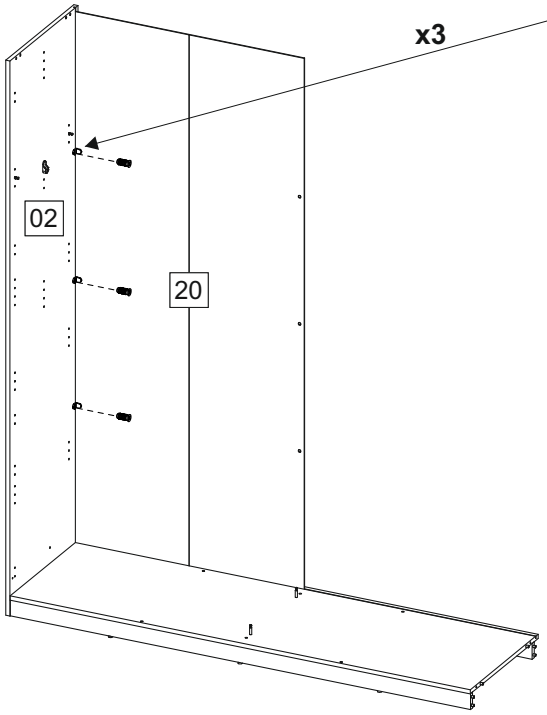

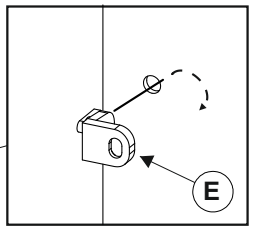

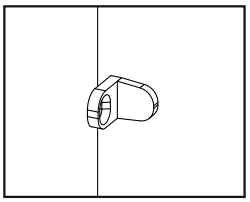

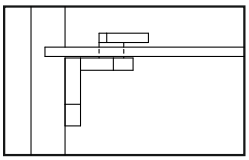

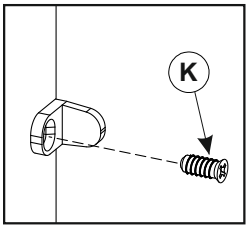

12

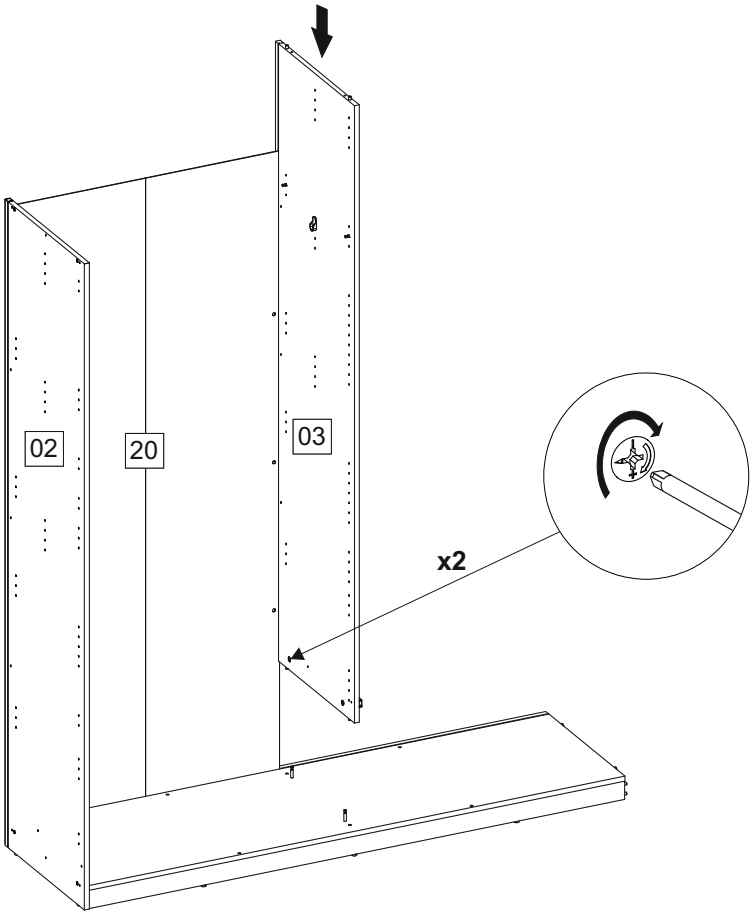

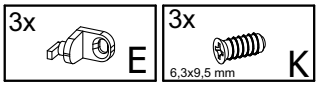

13

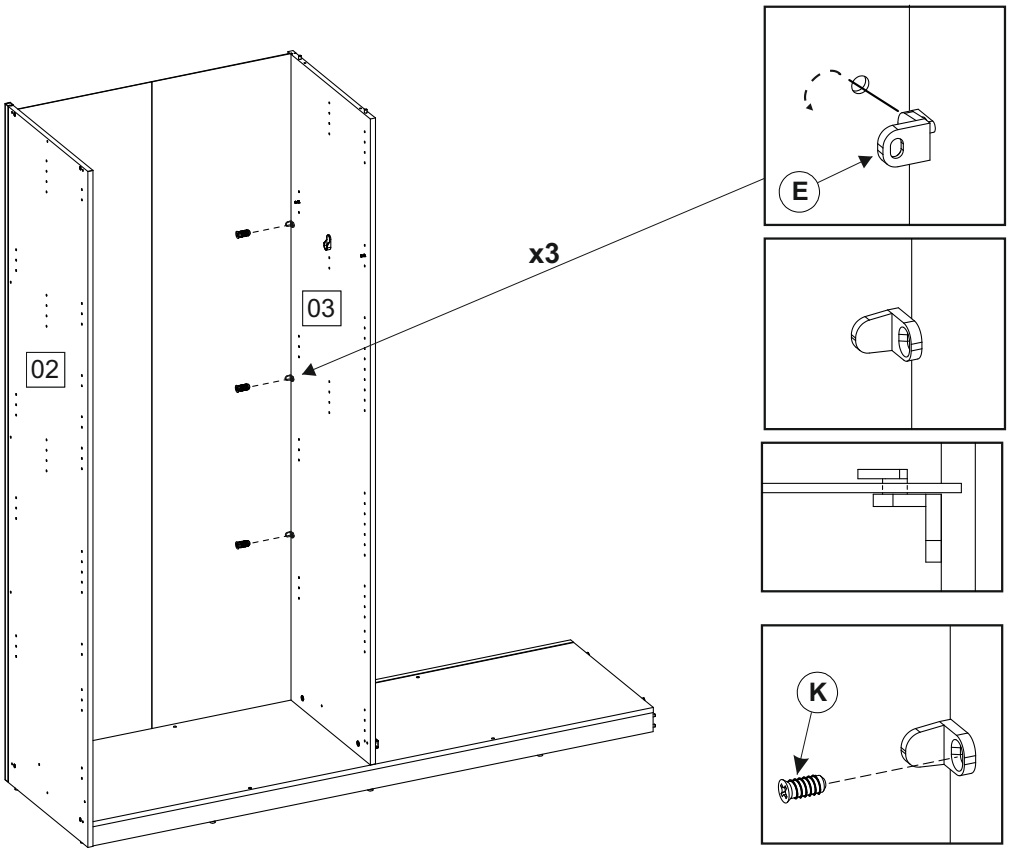

14

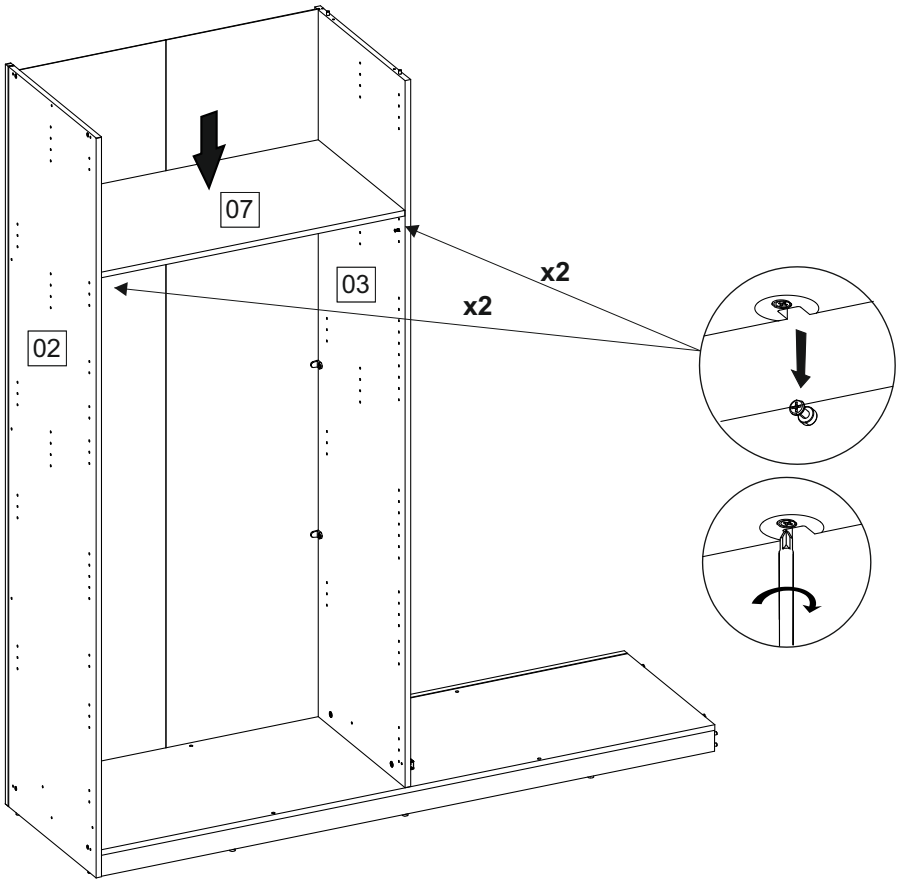

15

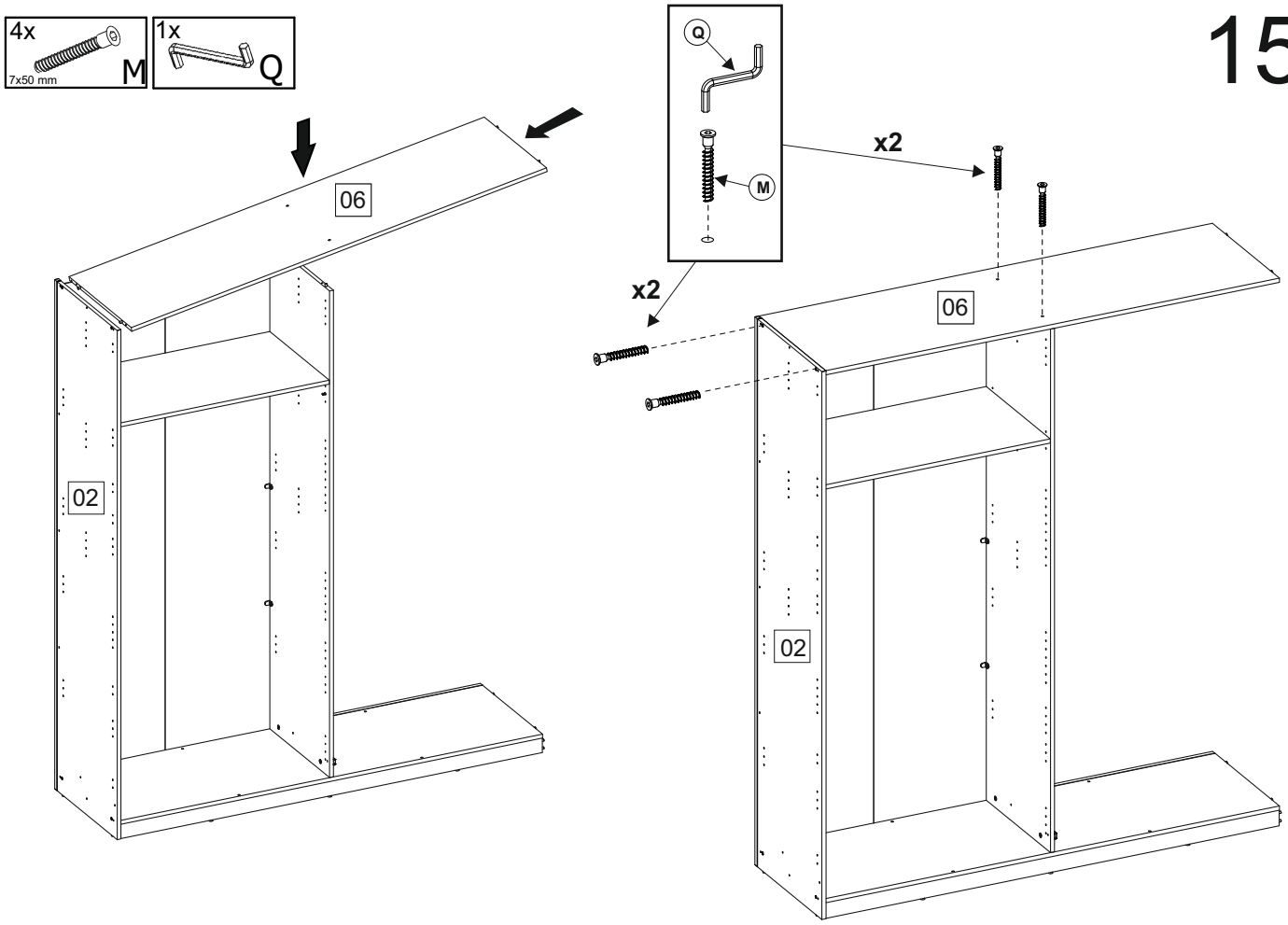
4x
7x50 mm
M
1x
Q
06
02
Q
M
x2
x2
06
02

16

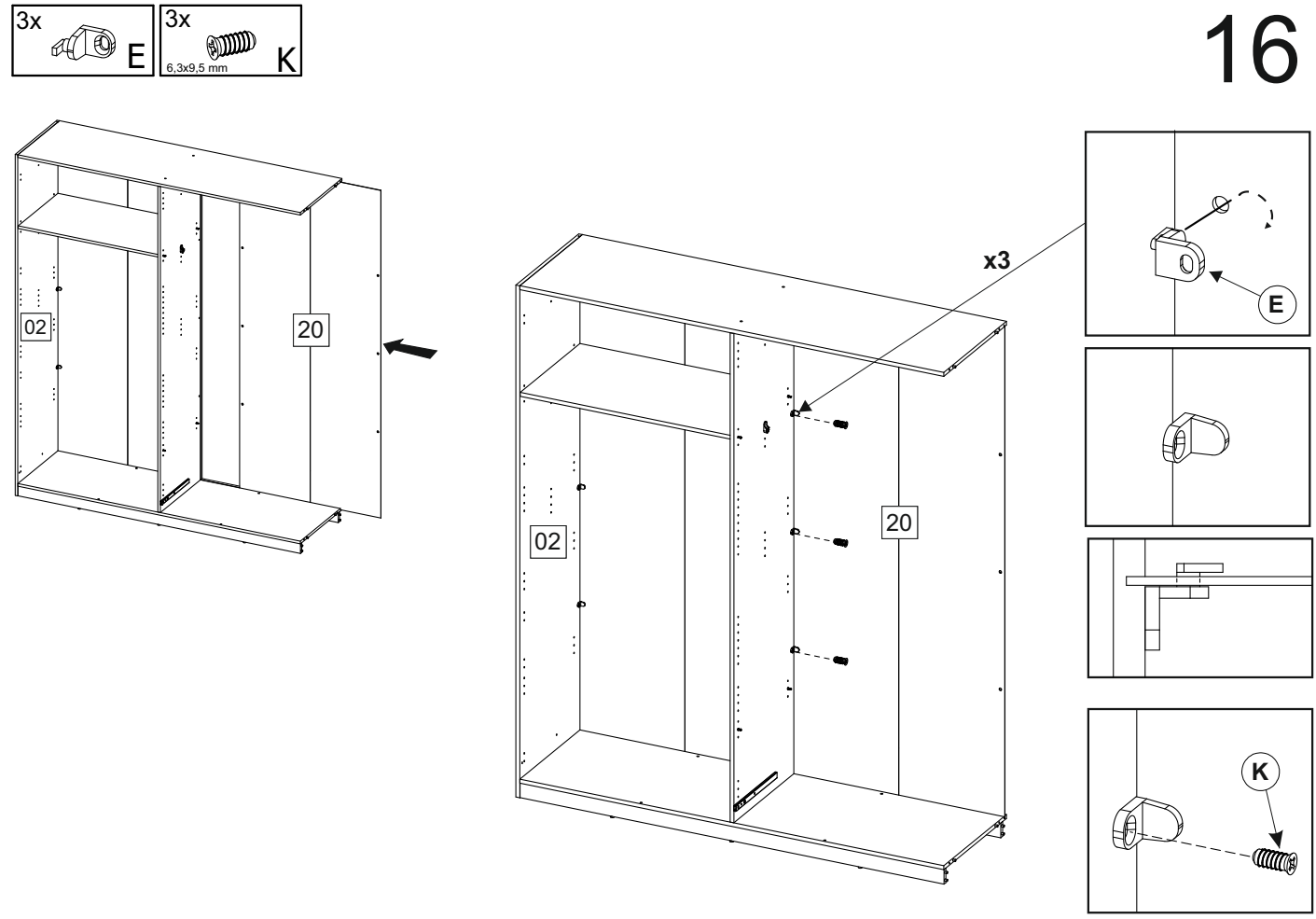
3x
E
3x
6,3x9,5 mm
K
02
20
x3
02
20
E
K

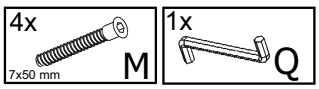

17

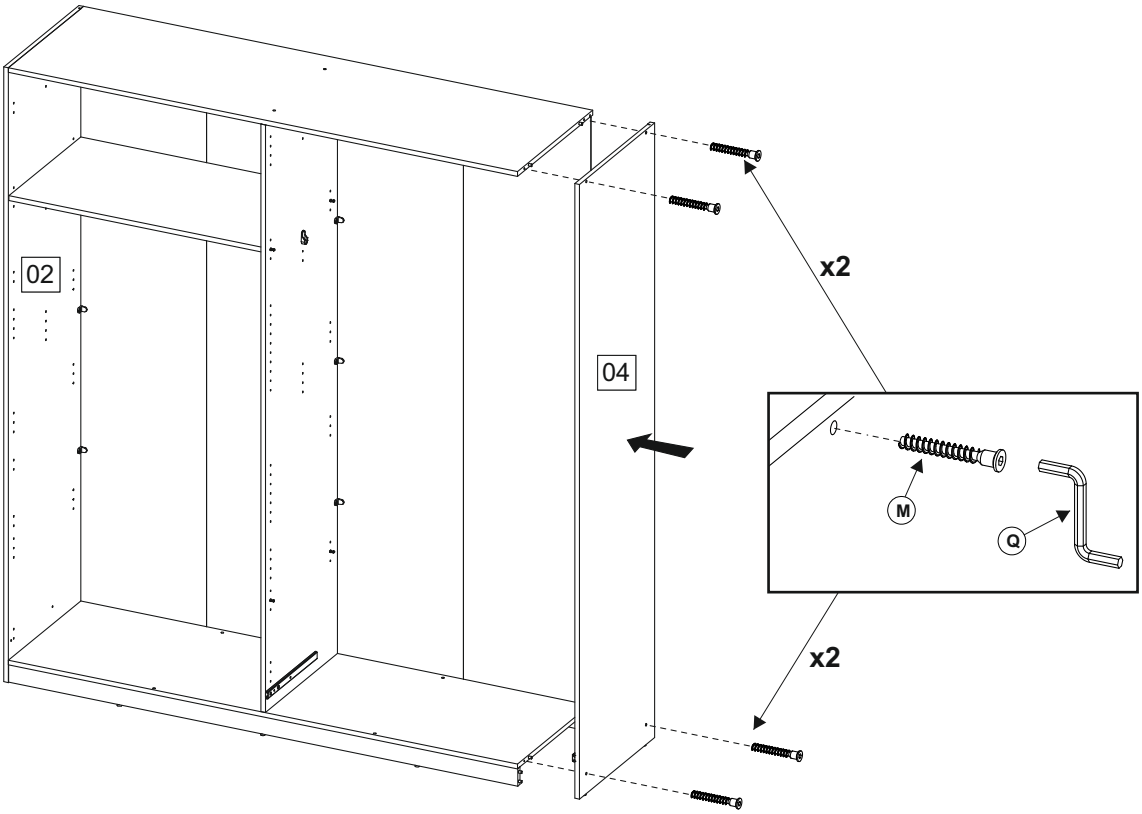

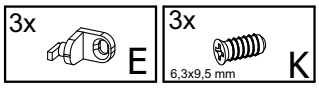

18

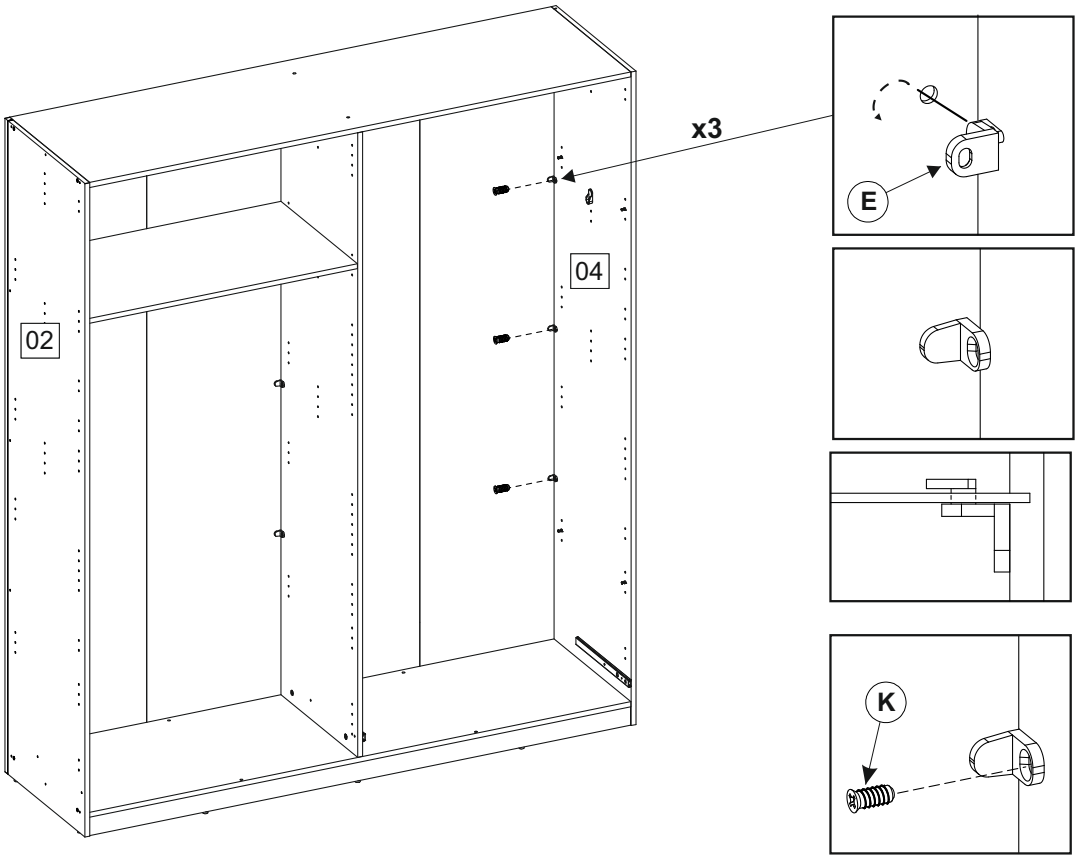

19

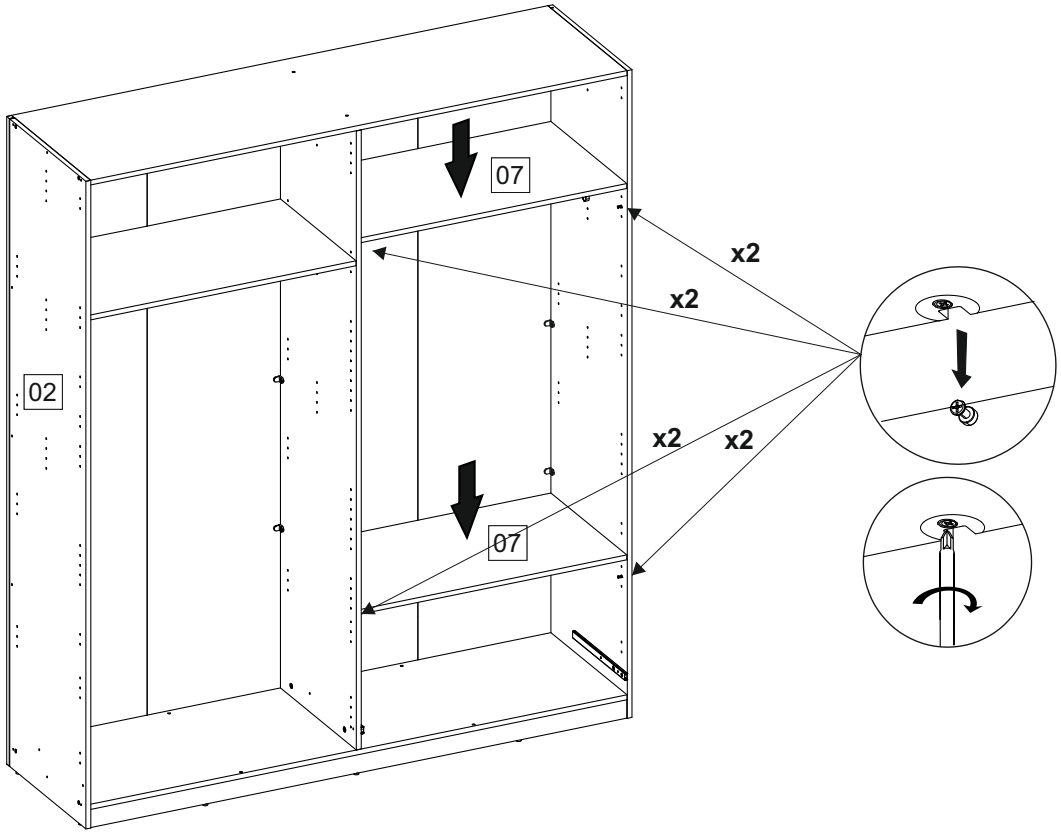

20

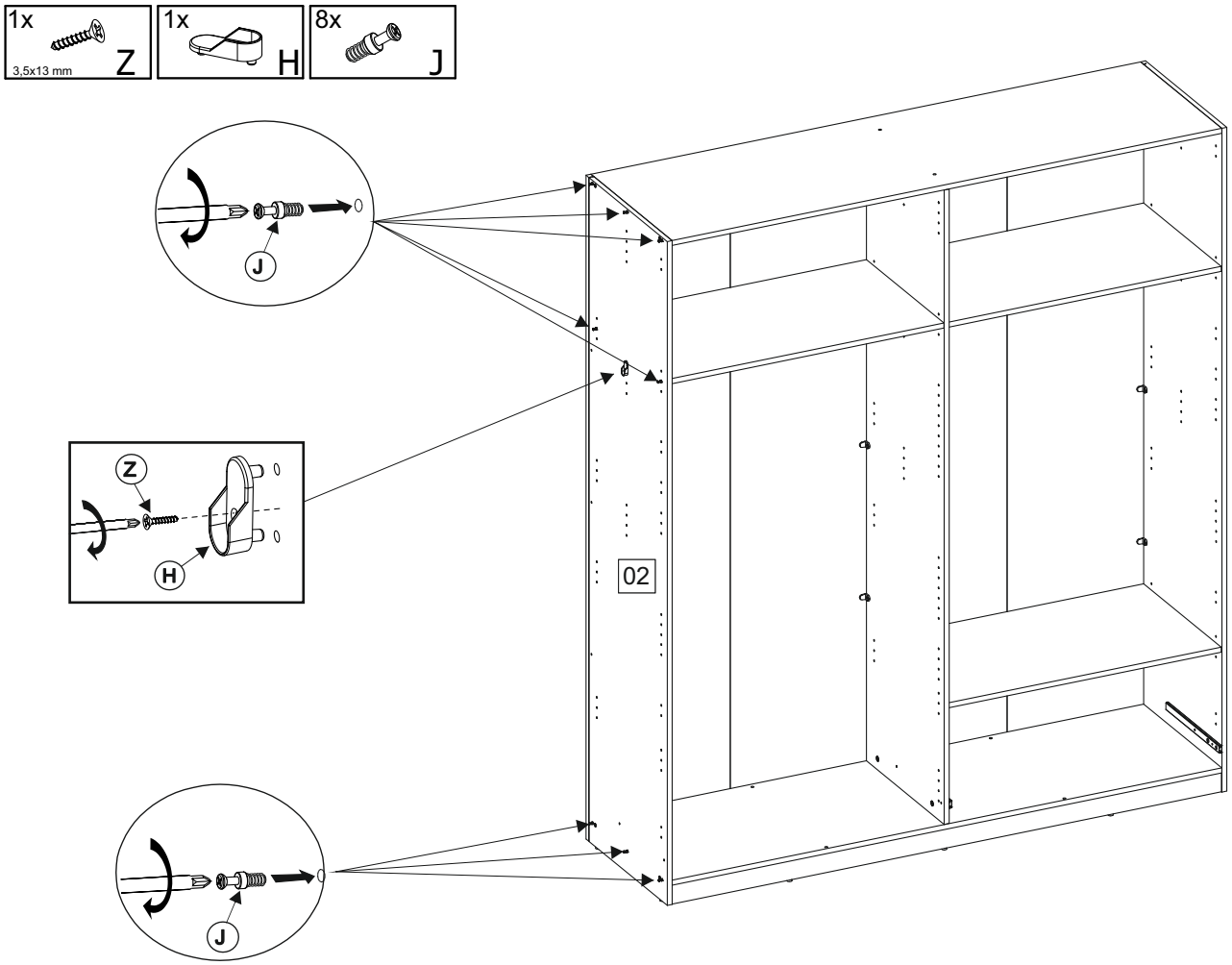

21

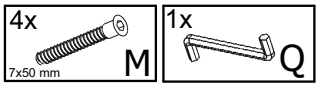

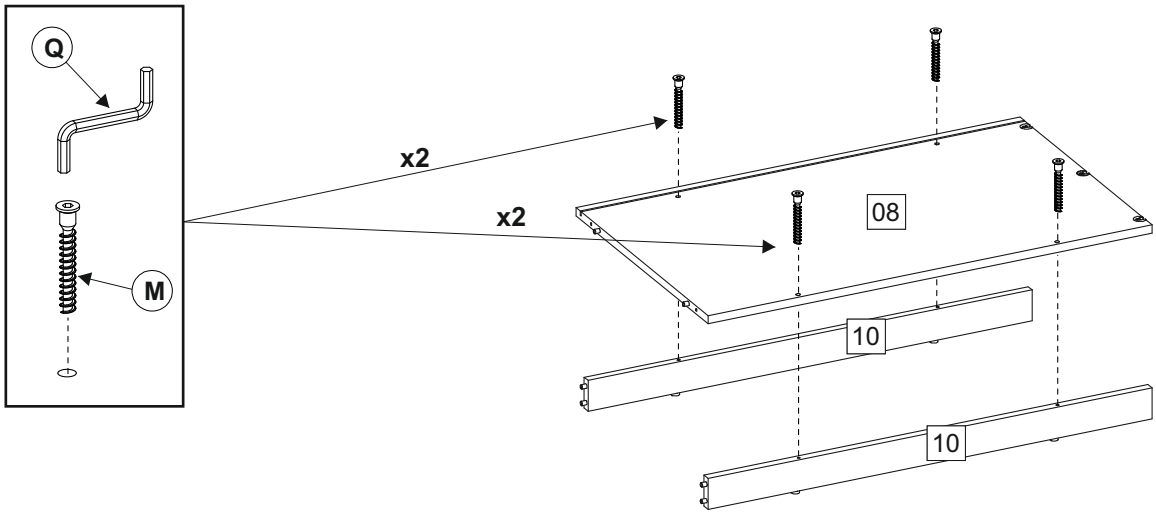

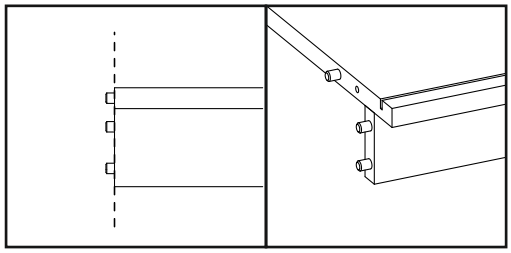

22

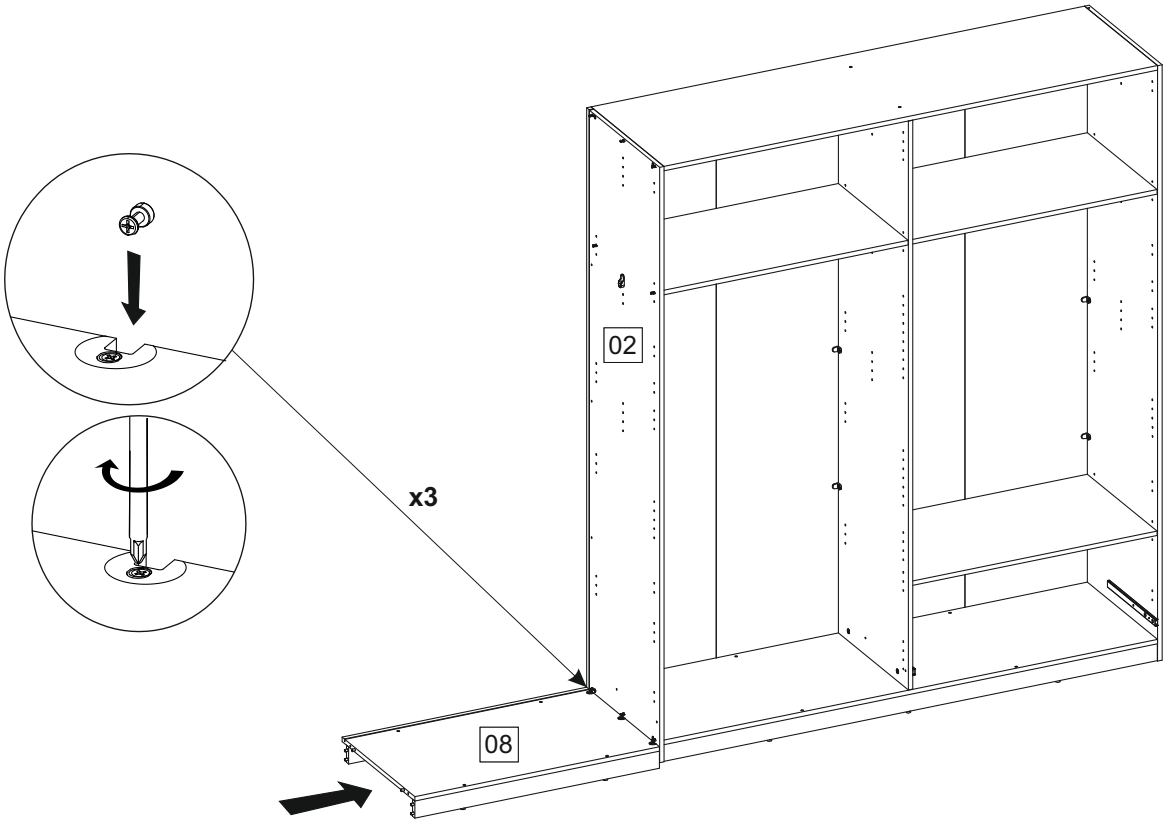

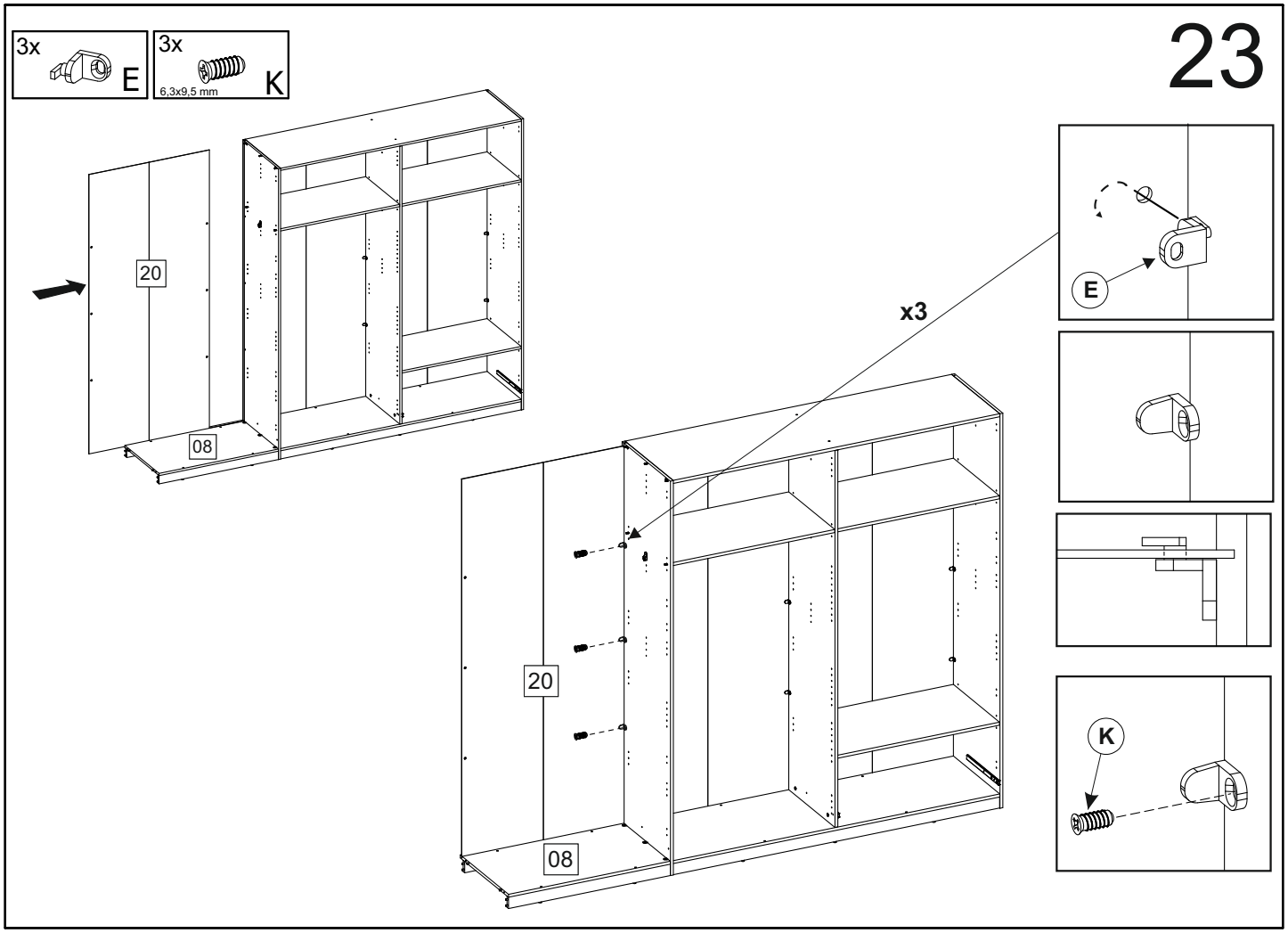
23
3x
E
3x
6,3x9,5 mm
K
20
08
x3
20
08
E
K

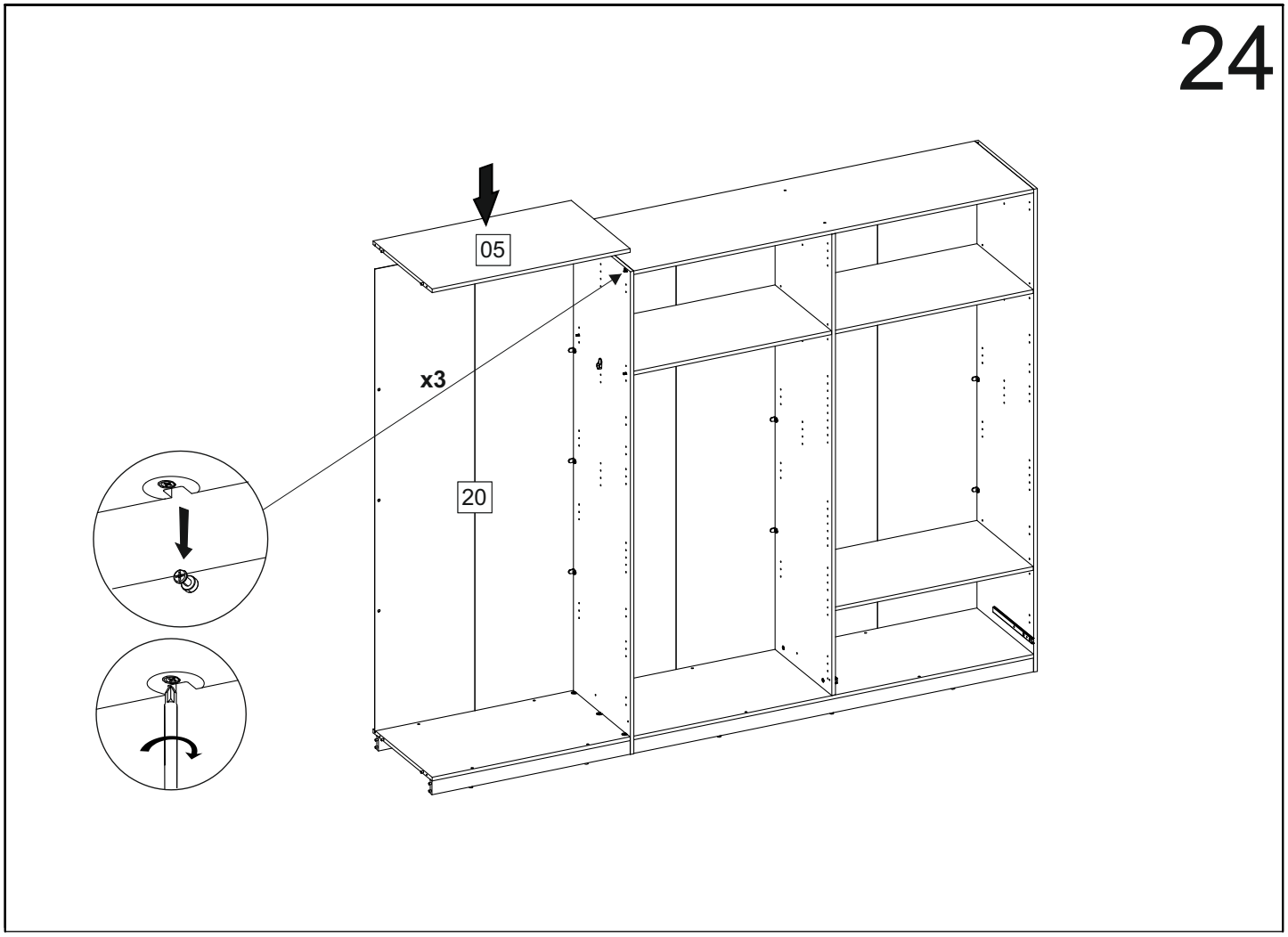
24
05
x3
20

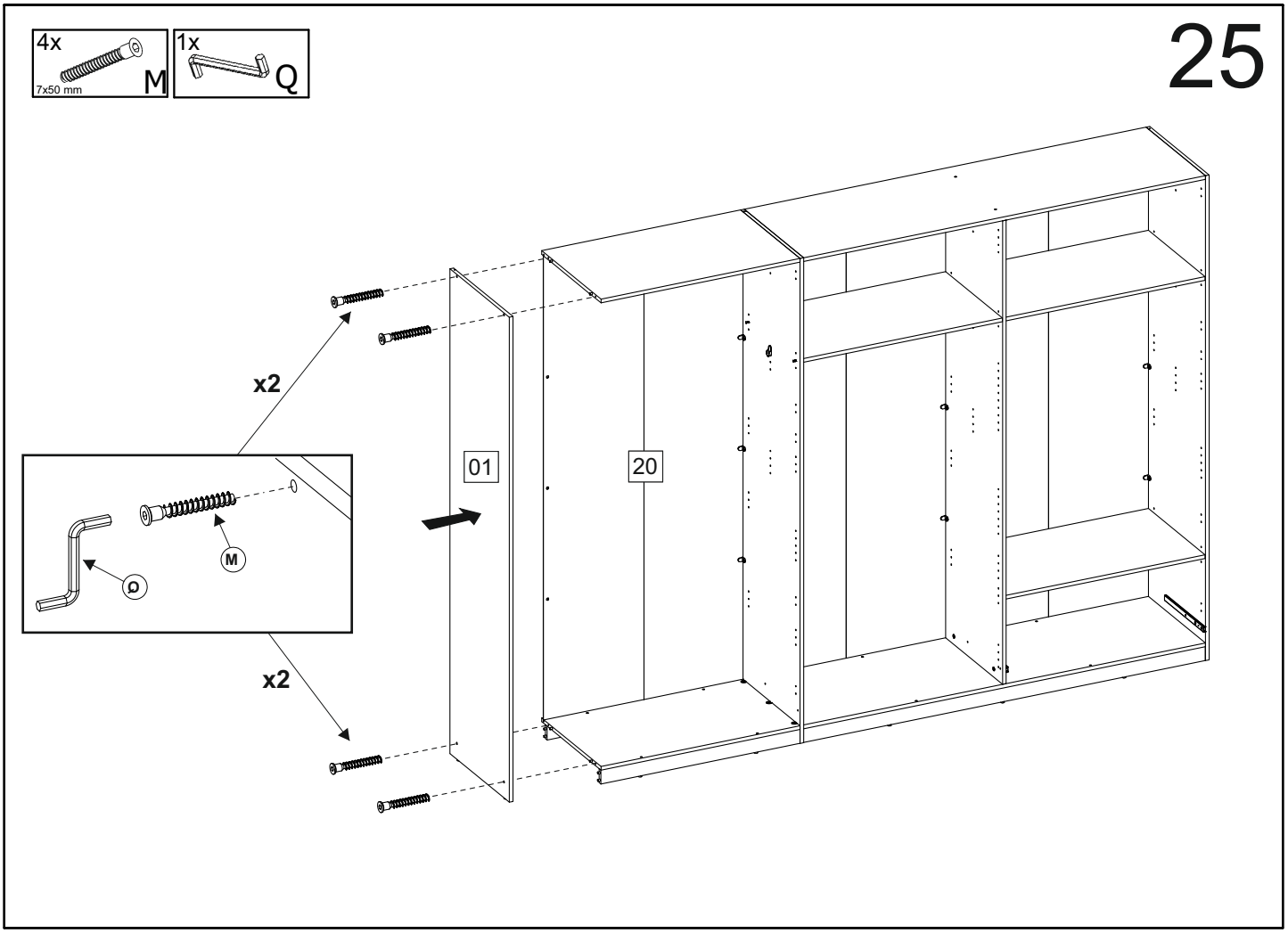
4x
7x50 mm
M
1x
Q
25
x2
x2
M
Q
01
20

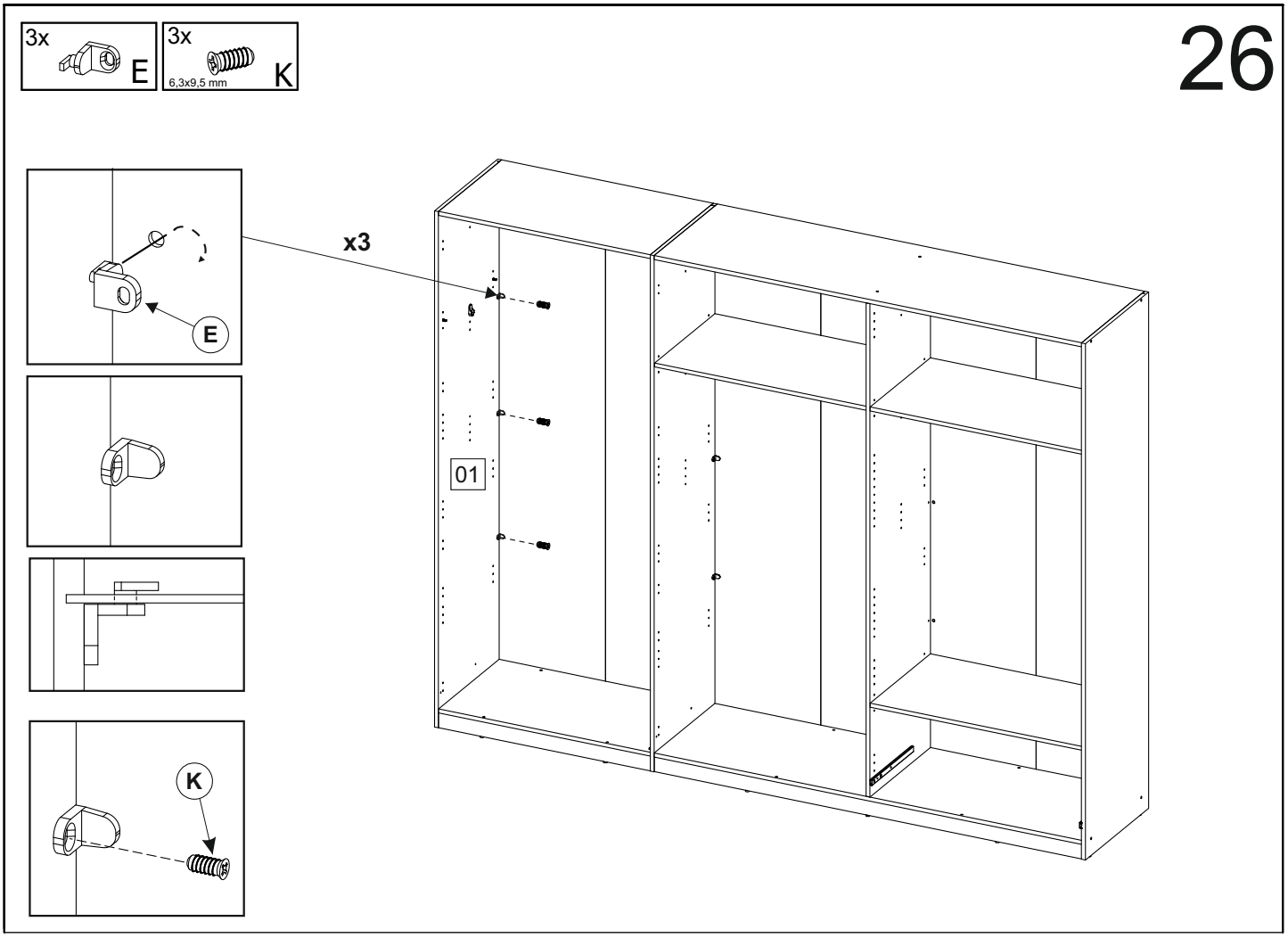
3x
E
3x
6,3x9,5 mm
K
26
x3
E
K
01

27

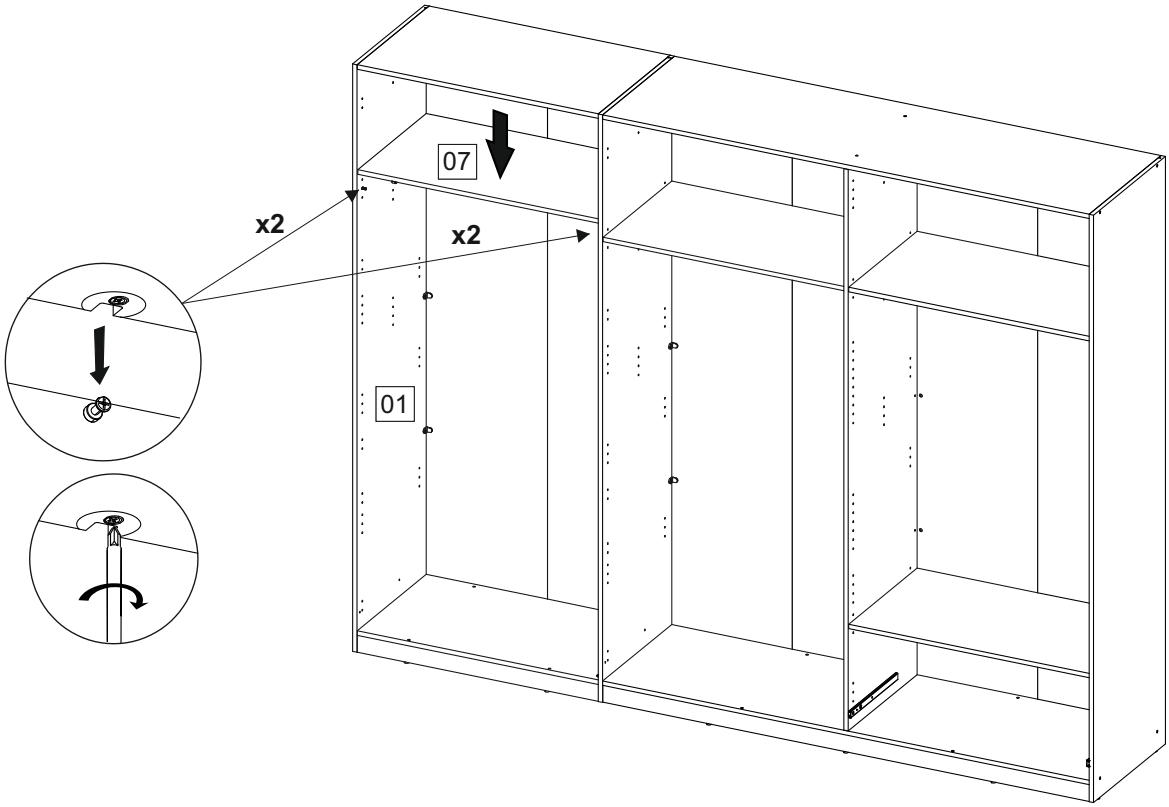

28

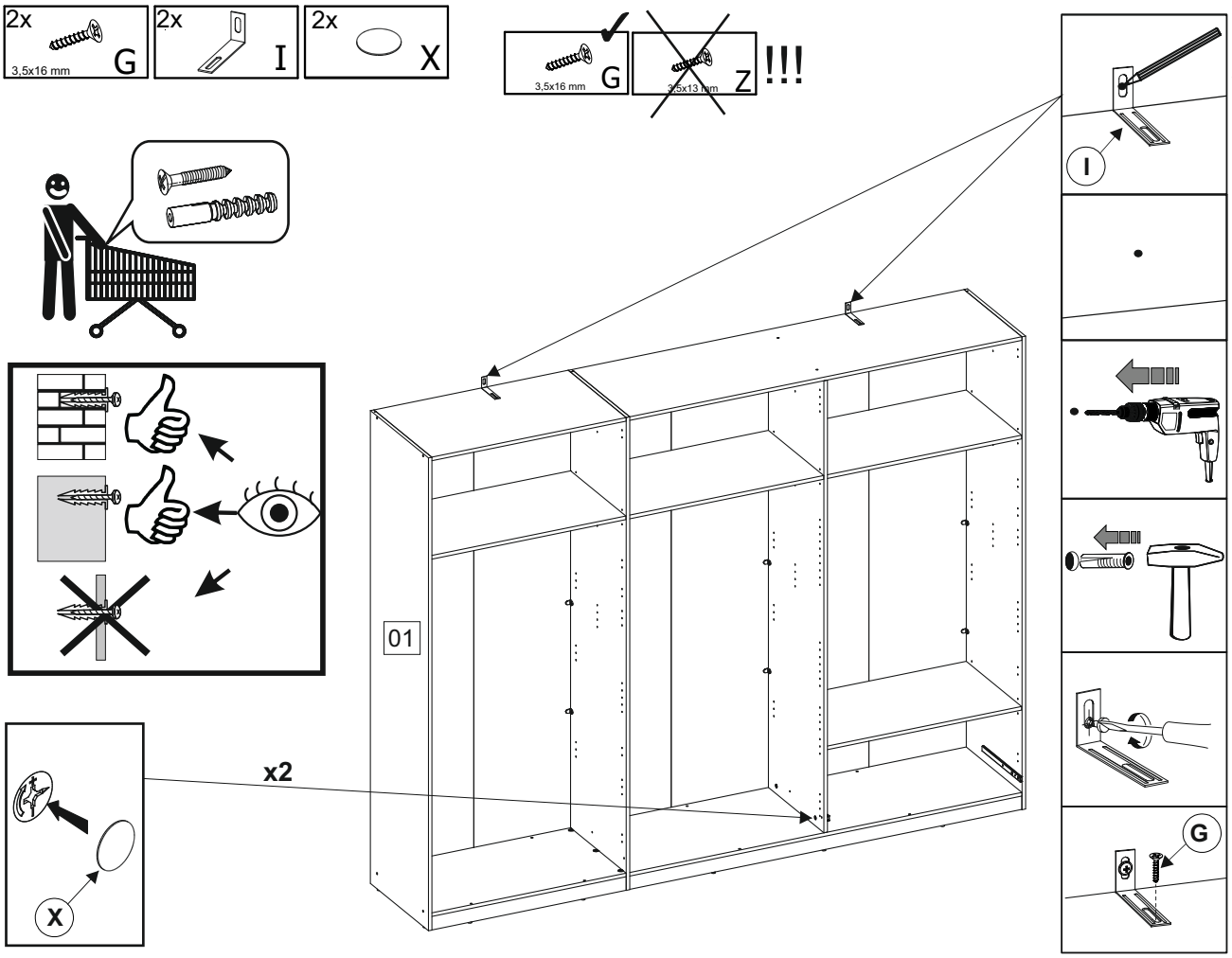

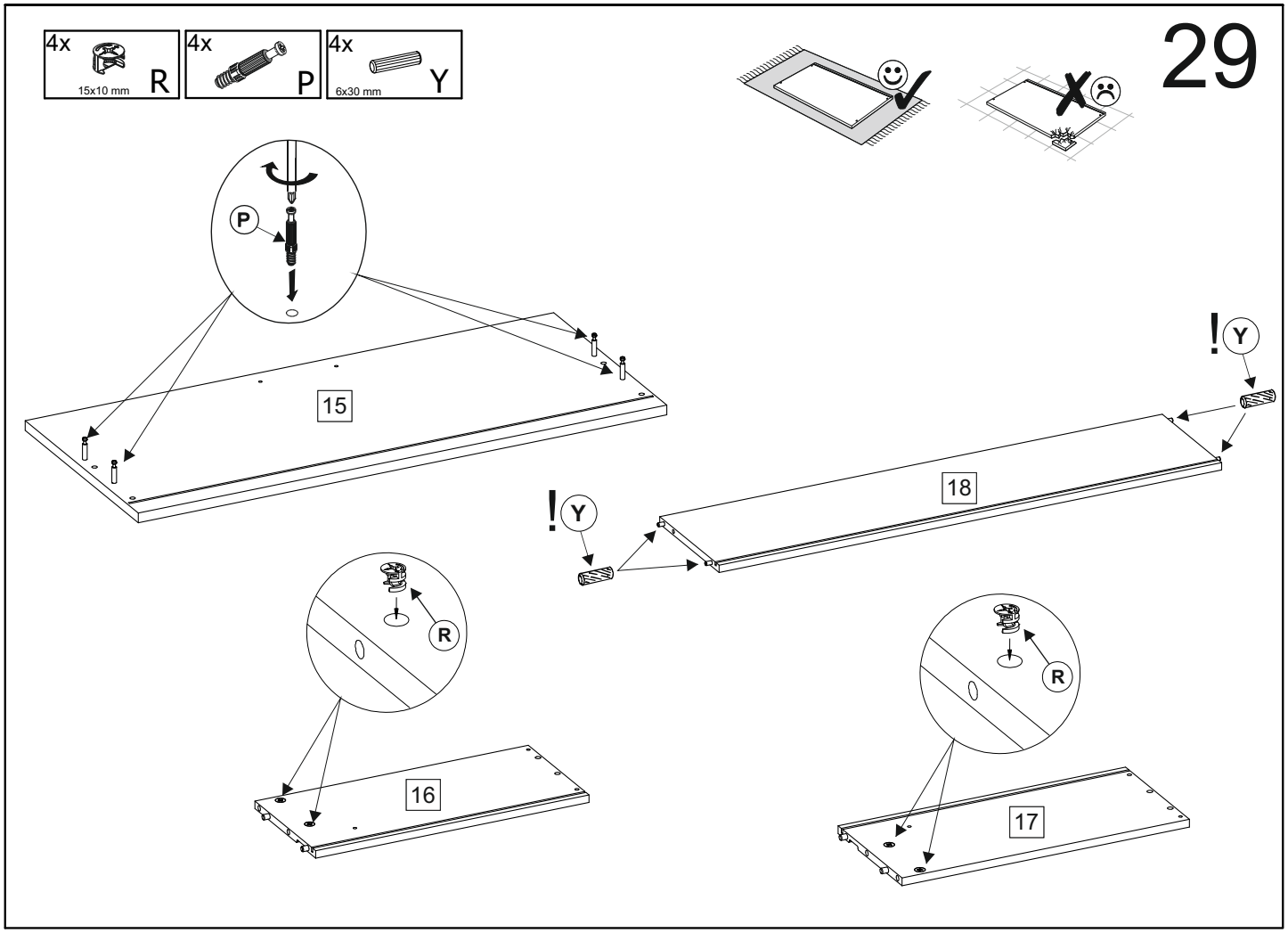
29
4x
15x10 mm
R
4x
P
4x
6x30 mm
Y
P
15
!
Y
18
!
Y
R
16
R
17

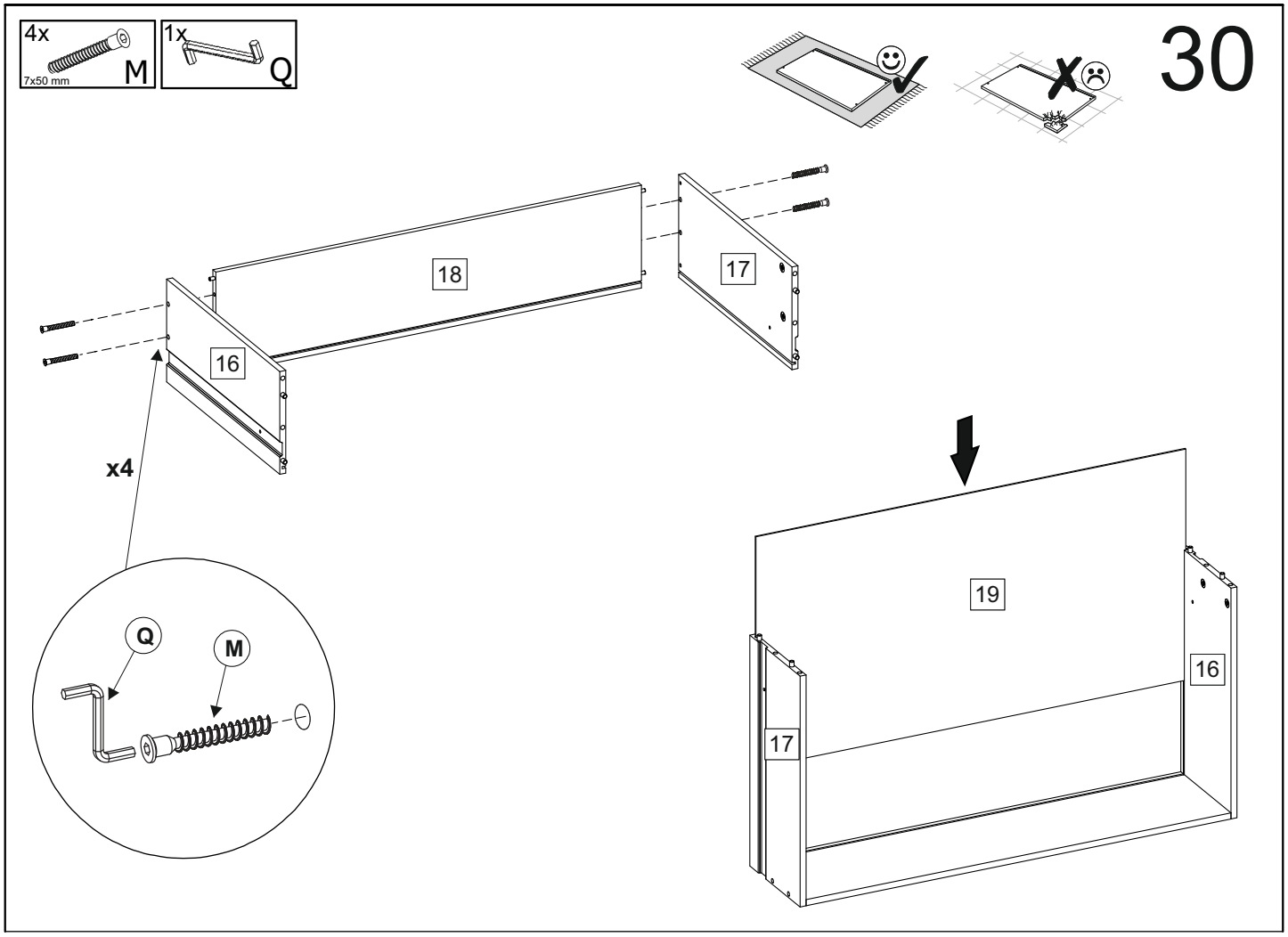
30
4x
7x50 mm
M
1x
Q
18
17
16
x4
Q
M
19
16
17

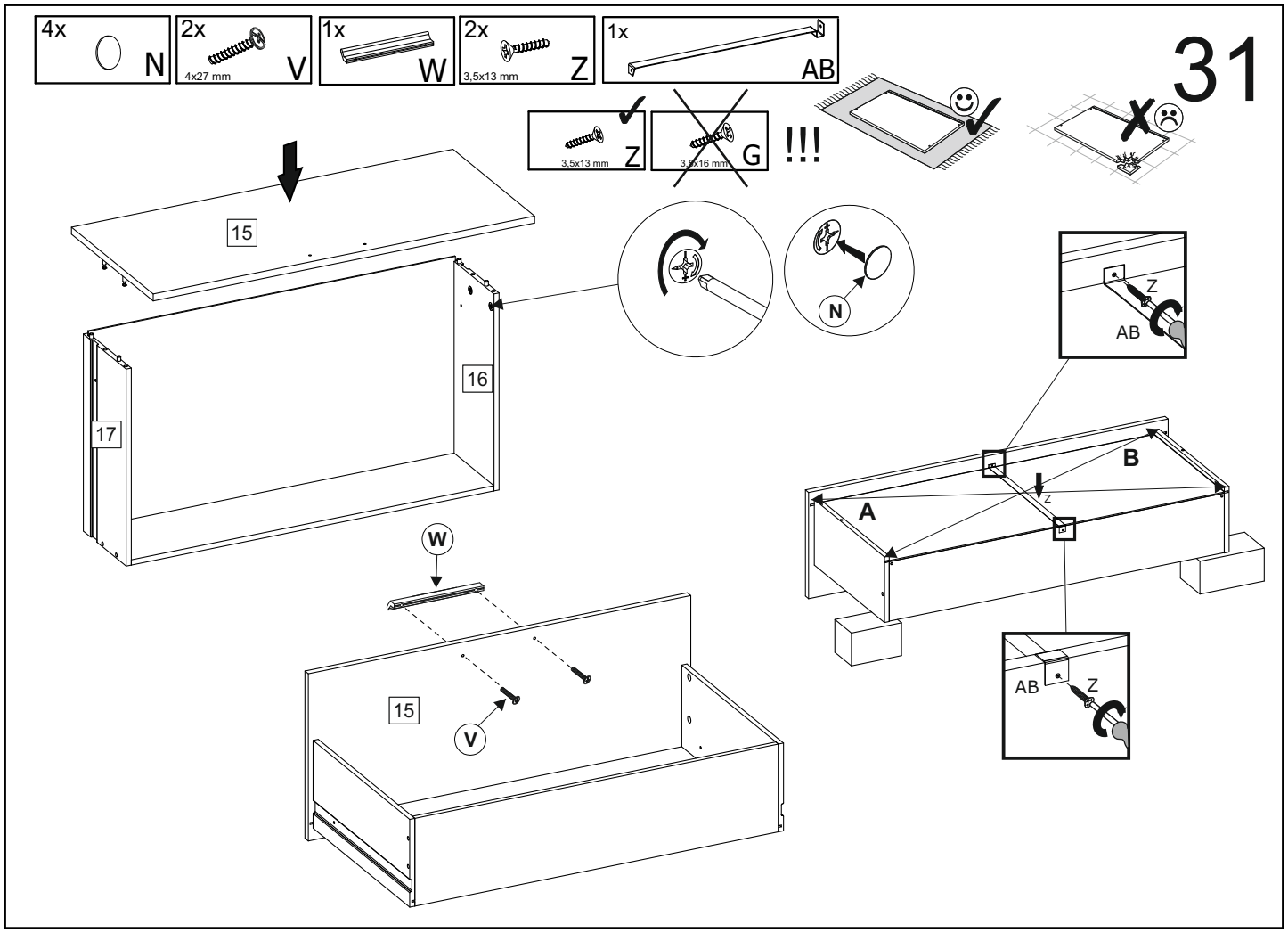
31
4x N
2x 4x27 mm V
1x W
2x 3,5x13 mm Z
1x AB
3,5x13 mm Z
3,5x16 mm G
!!!
15
16
17
N
Z
AB
A
B
W
15
V
AB
Z

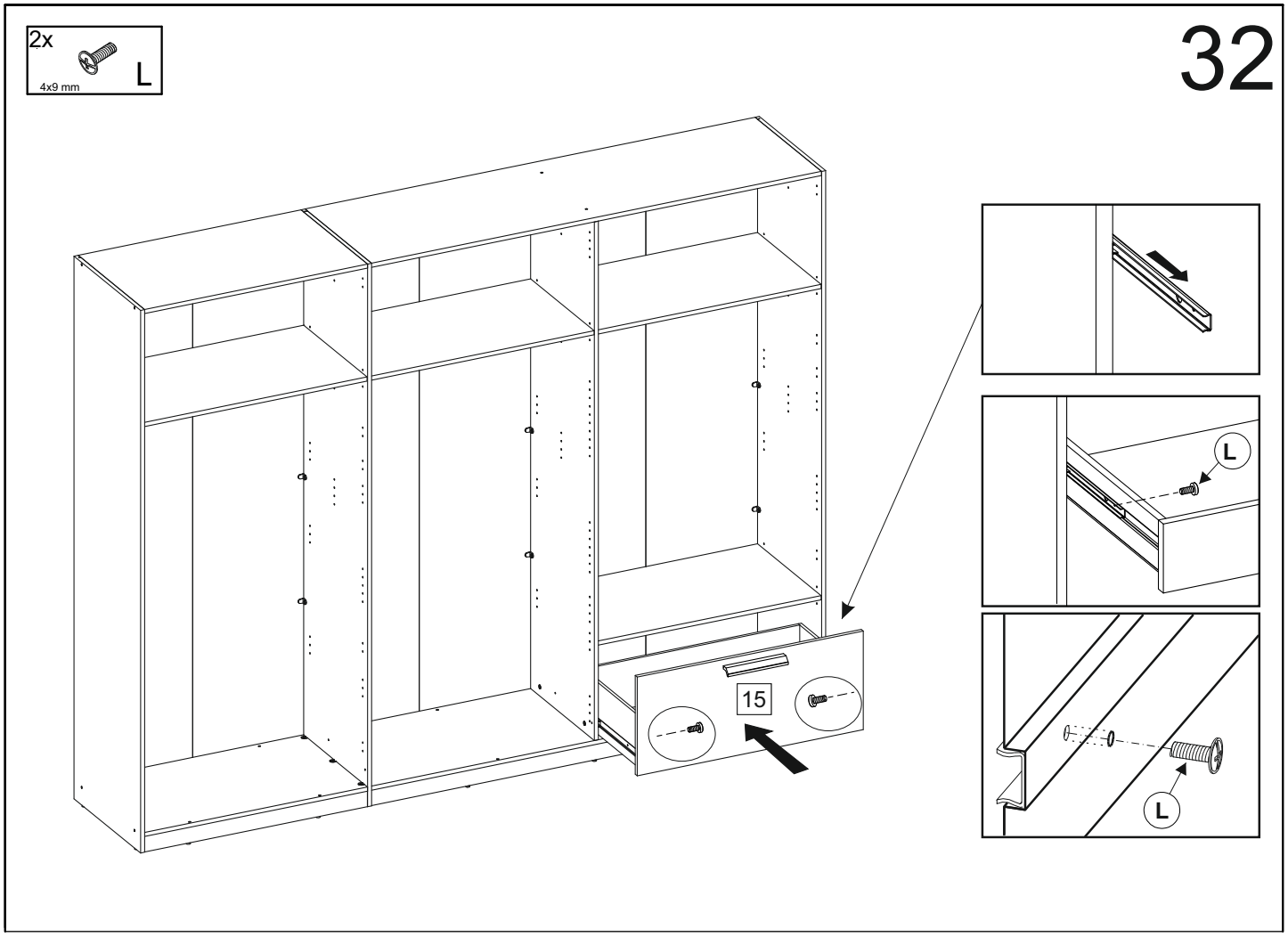
32
2x 4x9 mm L
15
L
L

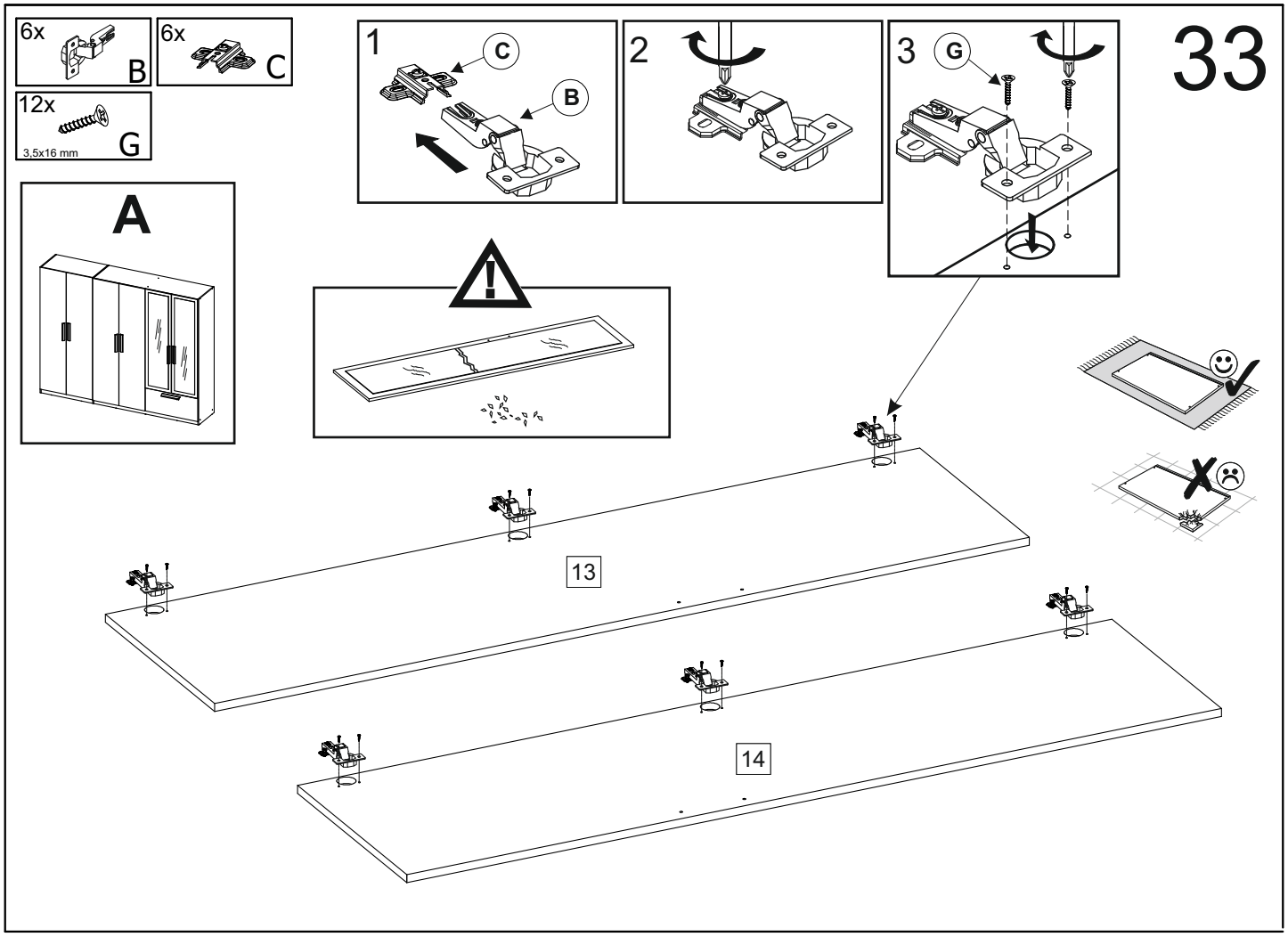
33
6x B
6x C
12x G
3,5x16 mm
A
1 C B
2
3 G
13
14

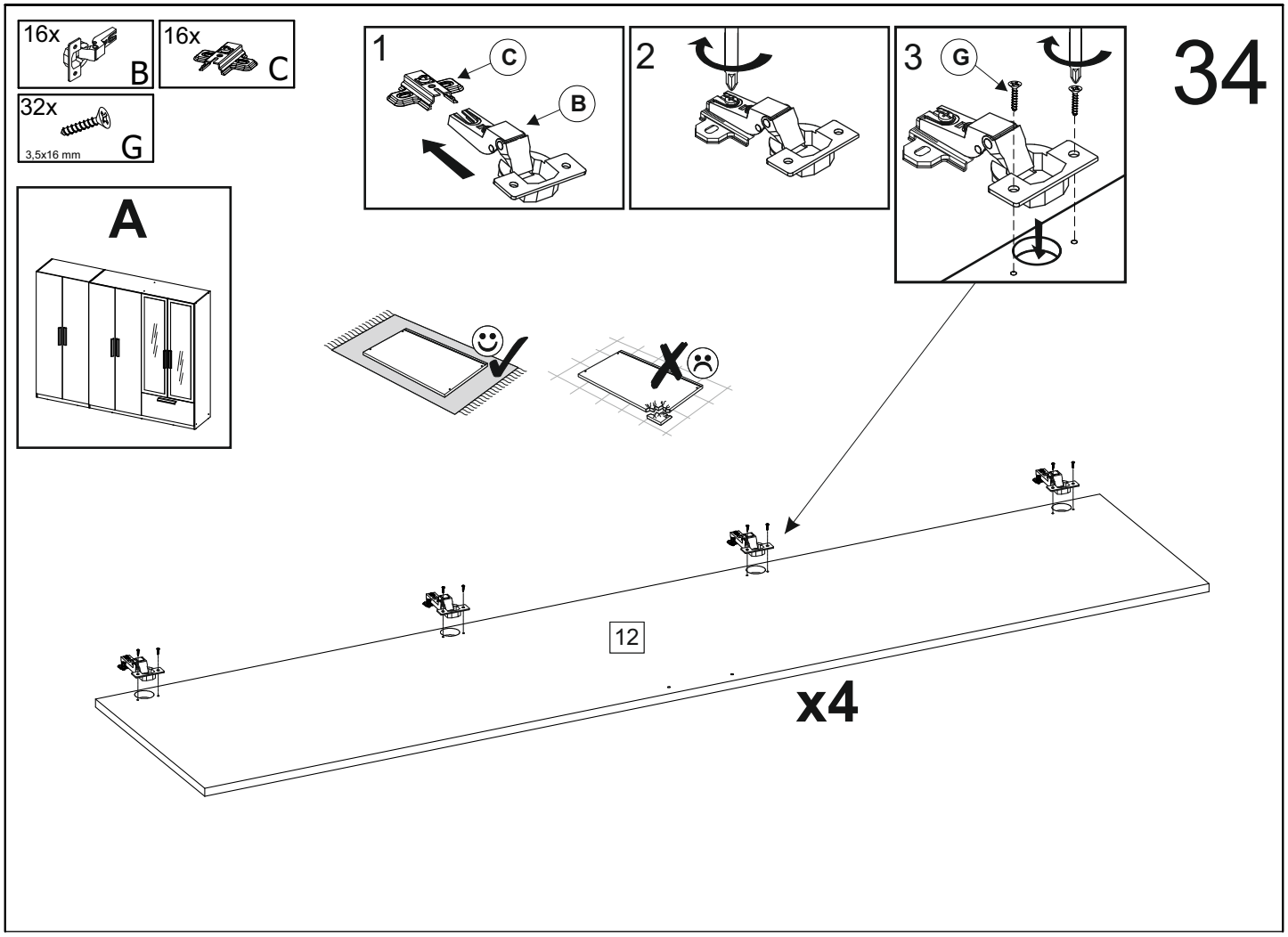
34
16x B
16x C
32x G
3,5x16 mm
A
1 C B
2
3 G
12
x4

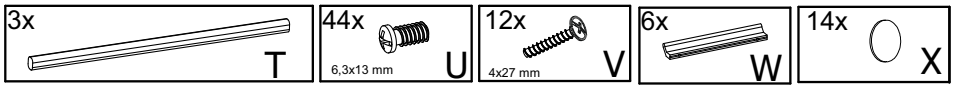
3x
T
44x
6,3x13 mm
U
12x
4x27 mm
V
6x
W
14x
X

35

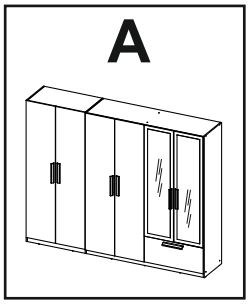
A

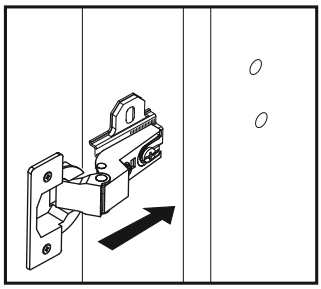

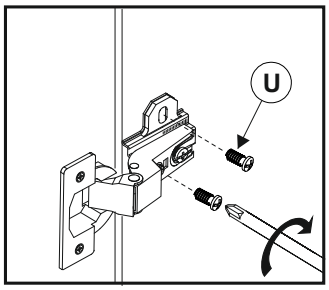
U

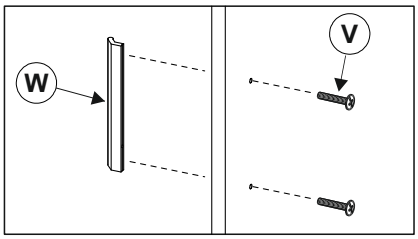
W
V

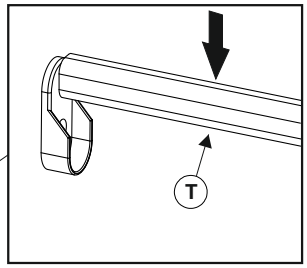
T

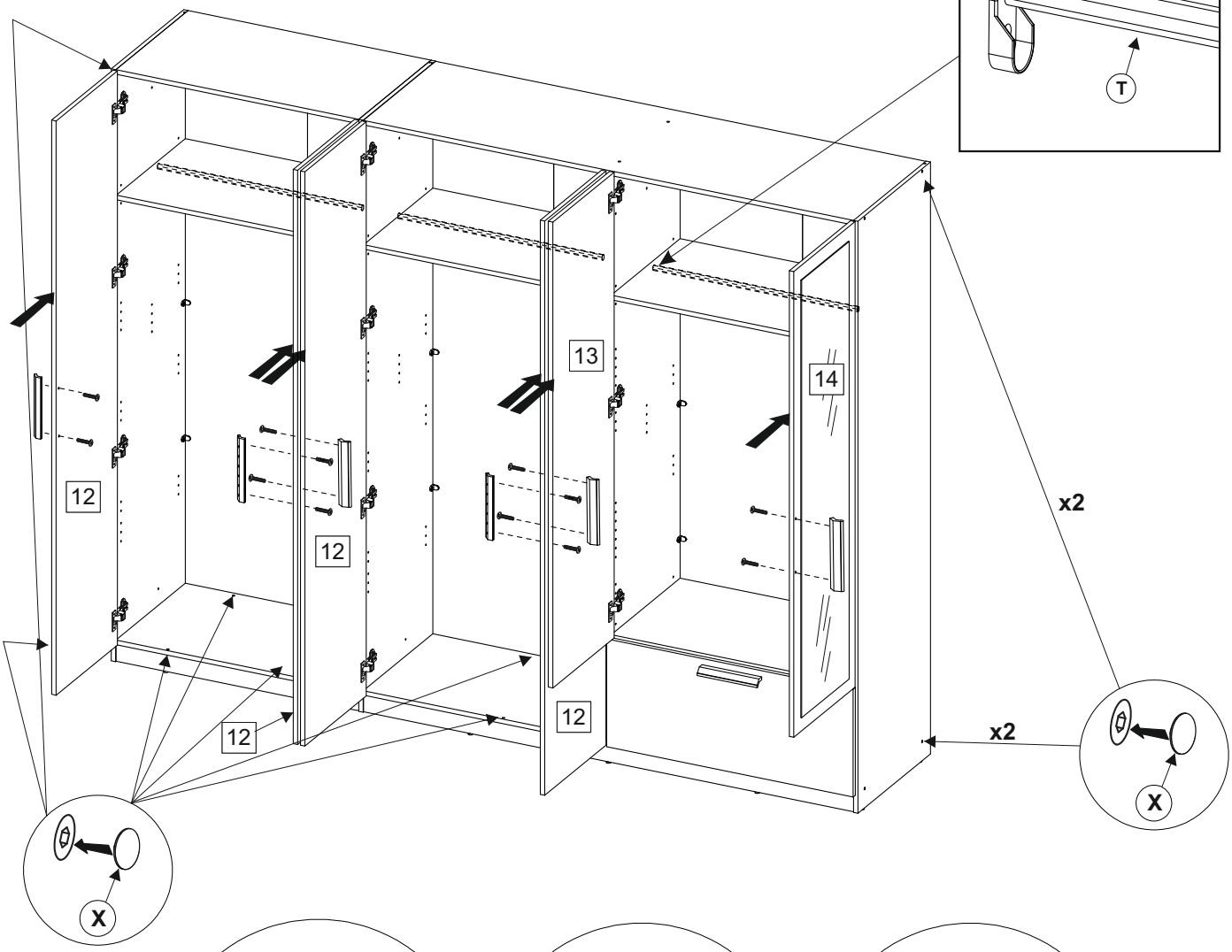
12
12
12
12
13
14
x2
x2
X
X

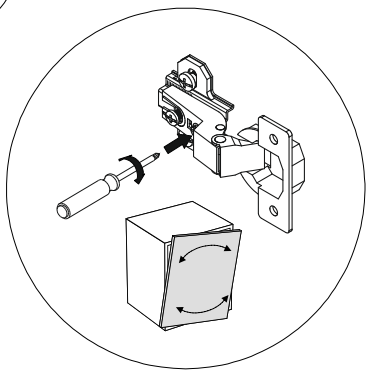

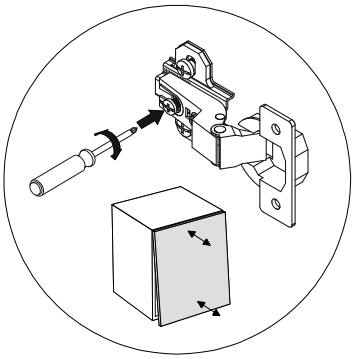

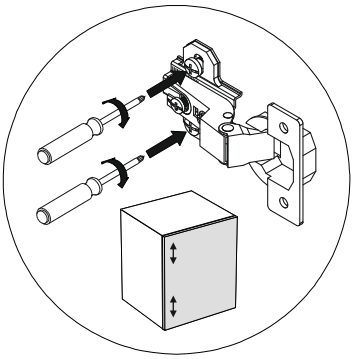

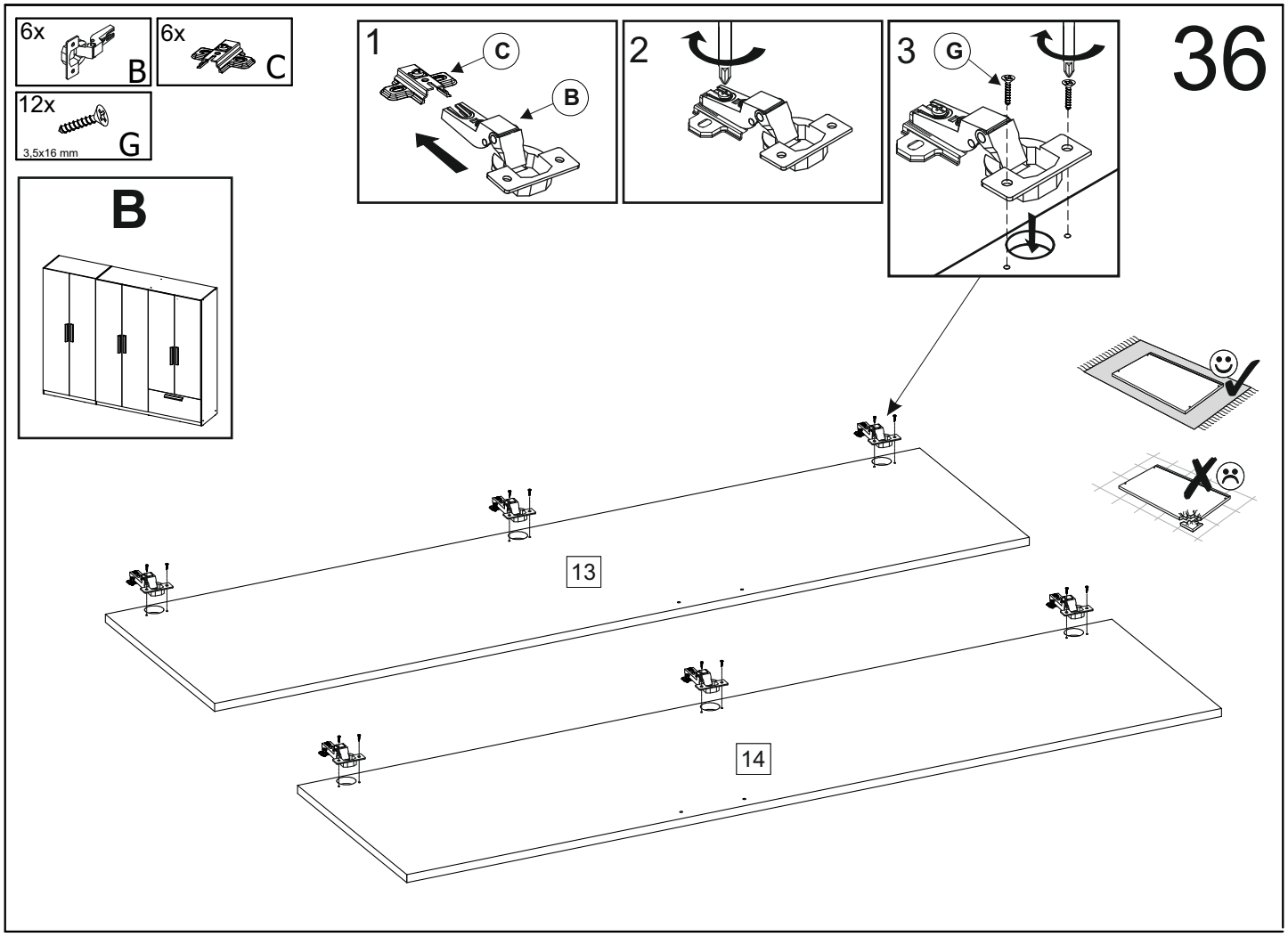
36
6x B
6x C
12x G
3,5x16 mm
B
1 C B
2
3 G
13
14

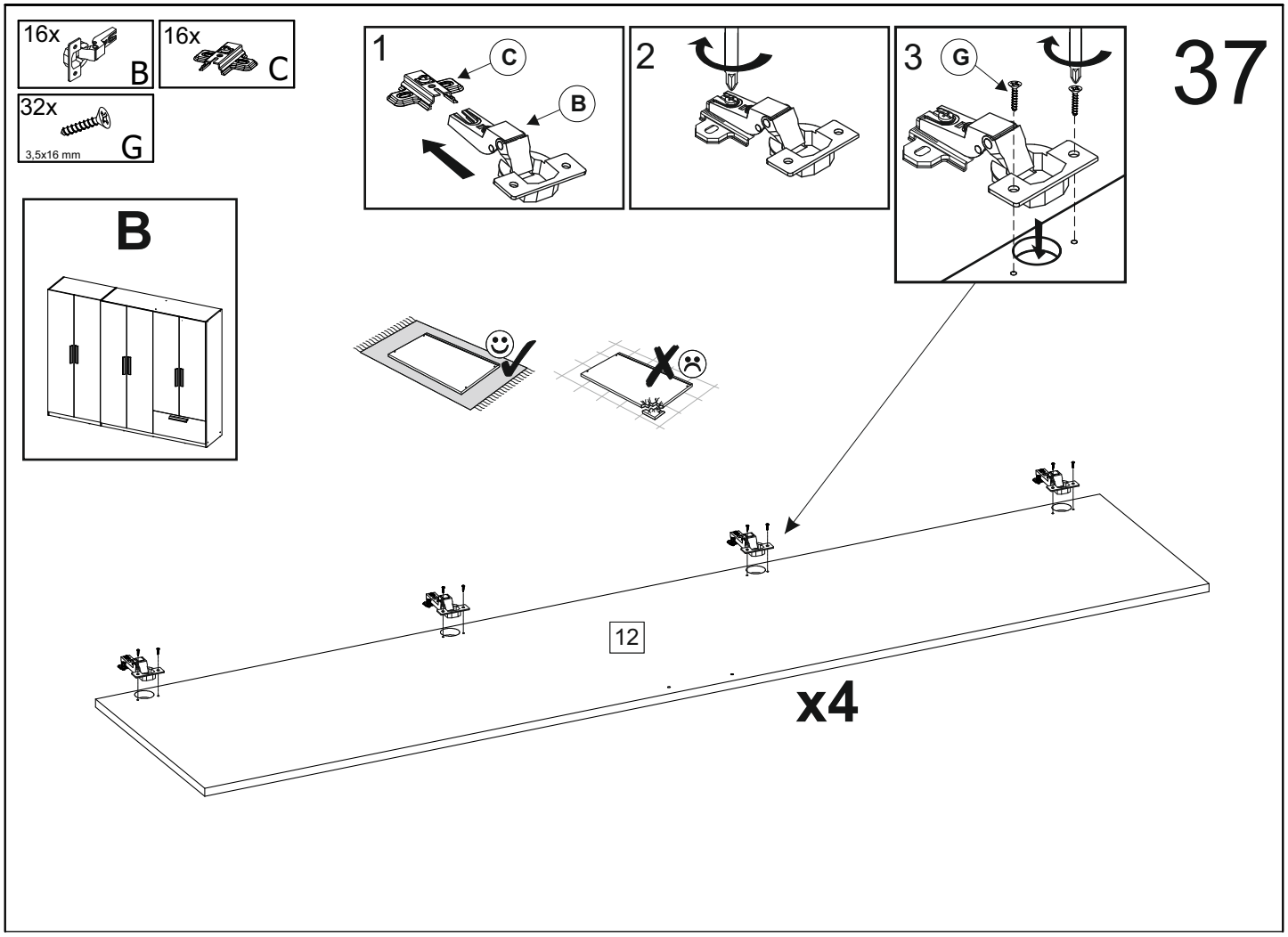
37
16x B
16x C
32x G
3,5x16 mm
B
1 C B
2
3 G
12
x4

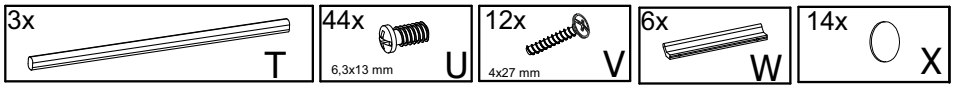
3x
T
44x
6,3x13 mm
U
12x
4x27 mm
V
6x
W
14x
X

35

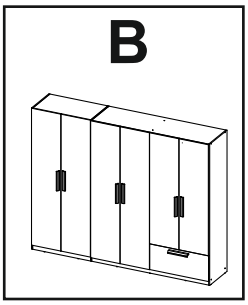
B

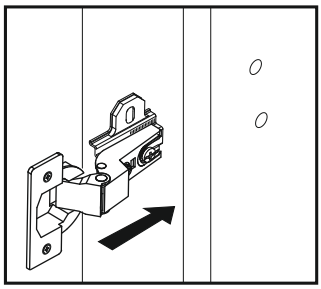

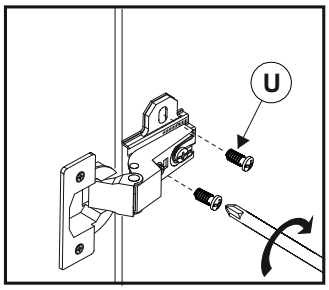
U

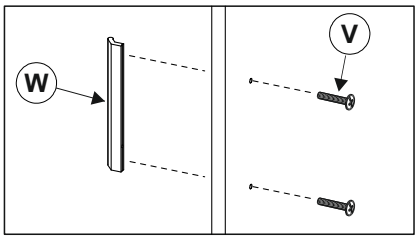
W
V

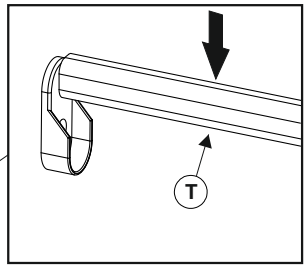
T

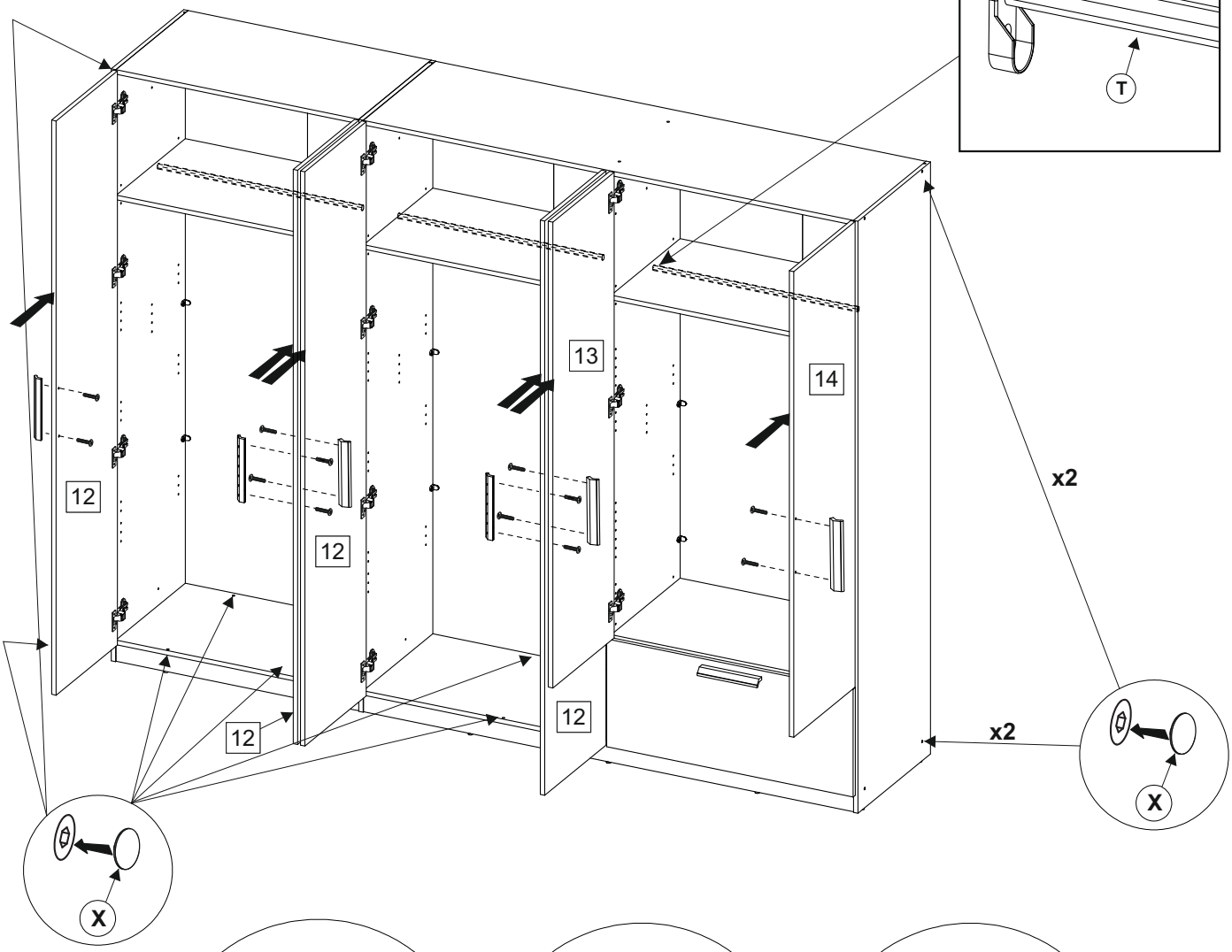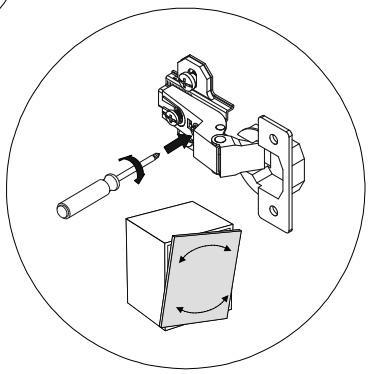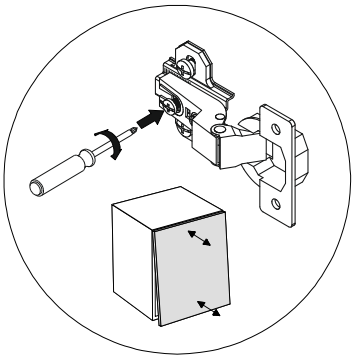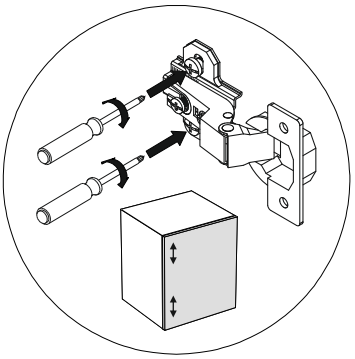
12
12
12
12
13
14
x2
x2
X
X