"BASE 180" art. № 18350003/03

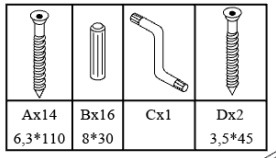

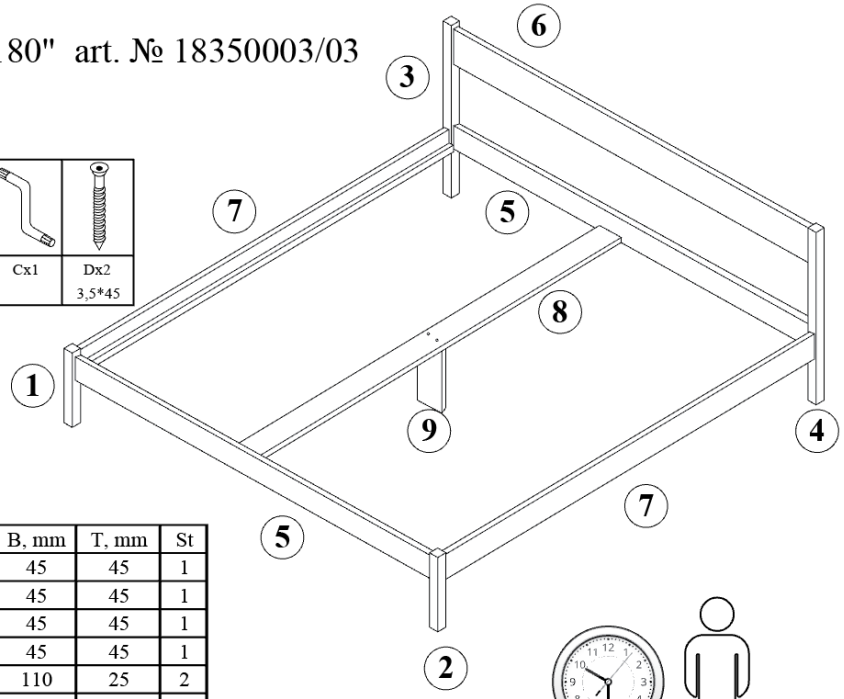
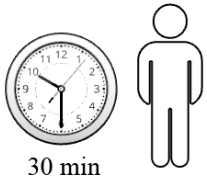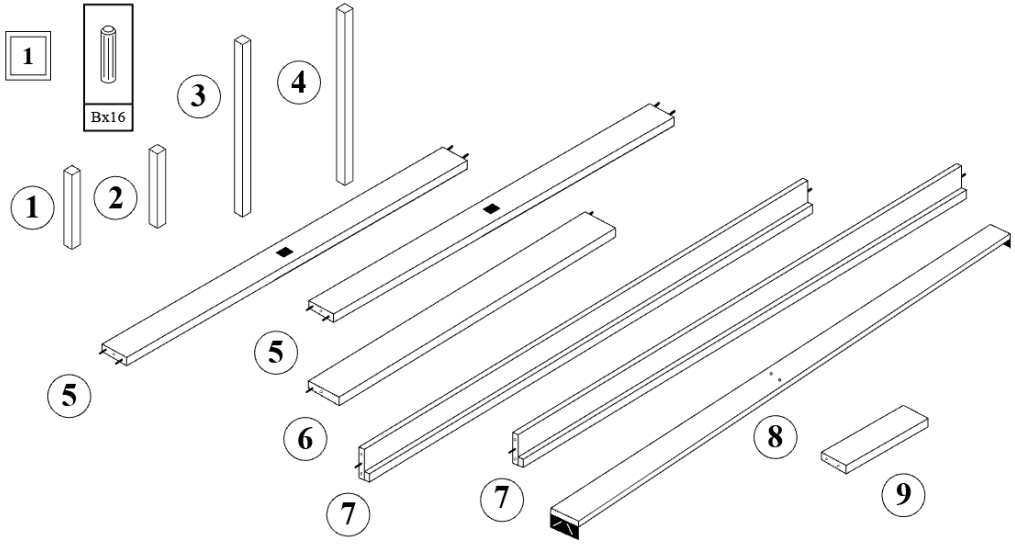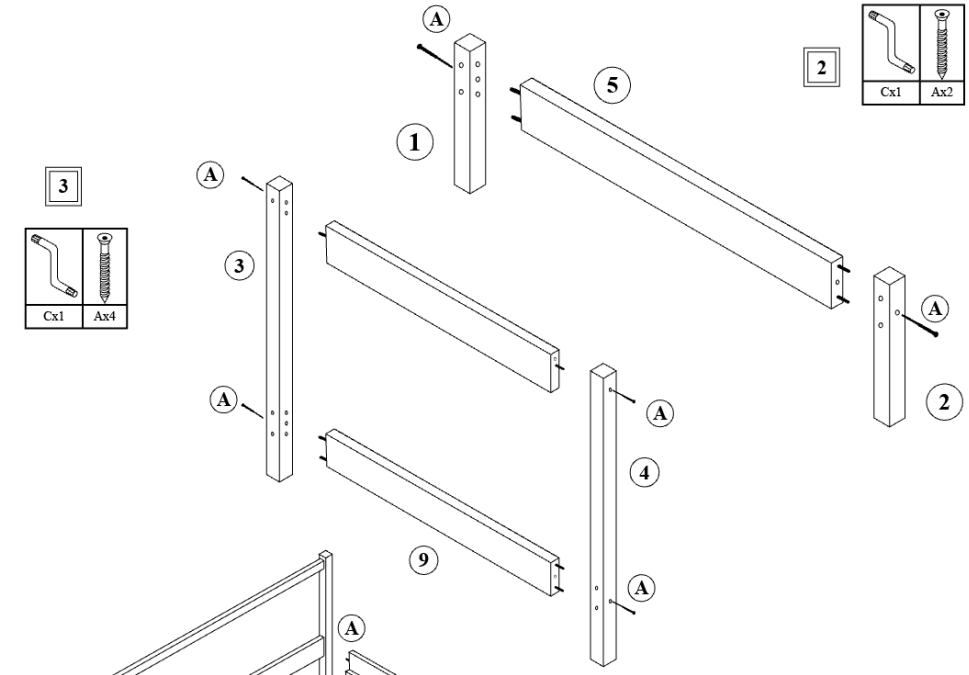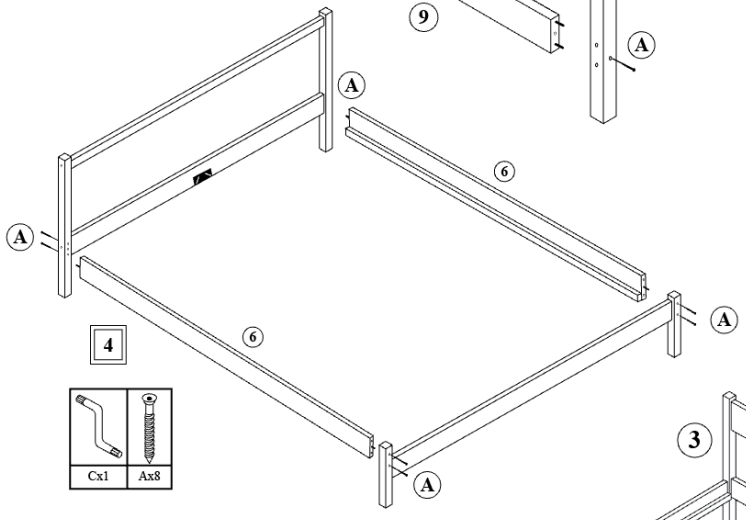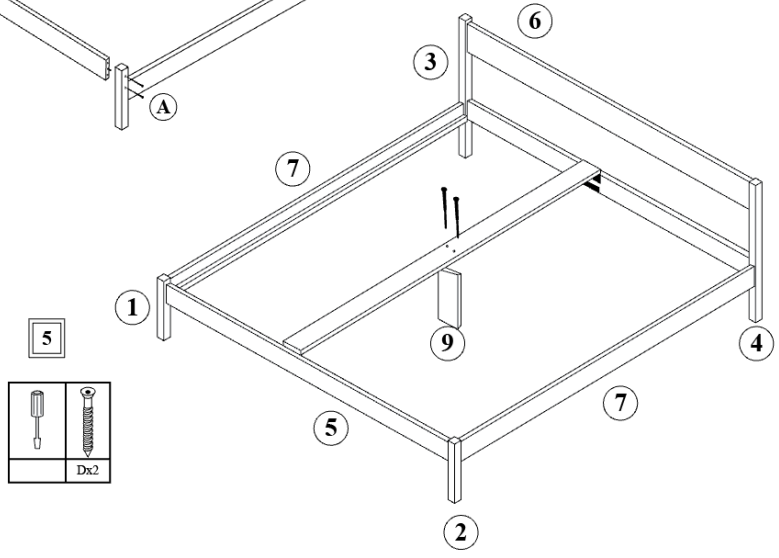
№	L, mm	B, mm	T, mm	St
1	340	45	45	1
2	340	45	45	1
3	700	45	45	1
4	700	45	45	1
5	1780	110	25	2
6	1780	110	25	1
7	1998	110	25	2
8	2002	68	22	1
9	203	68	25	1