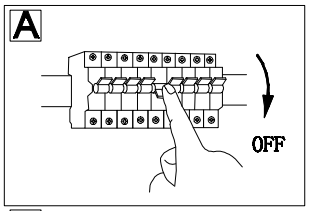

B

GLOBO
LIGHTING

15904-3HR

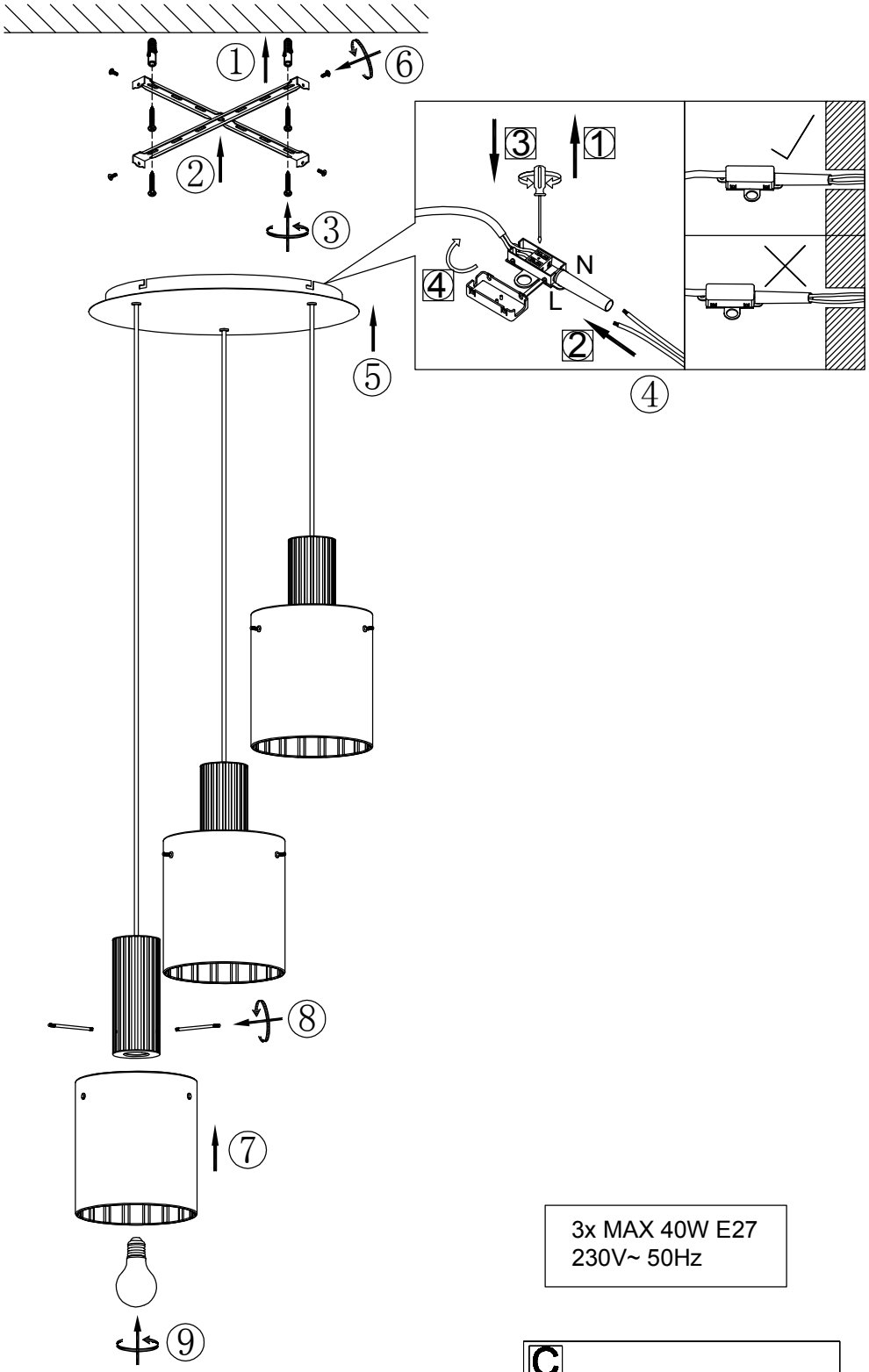

3x MAX 40W E27
230V~ 50Hz

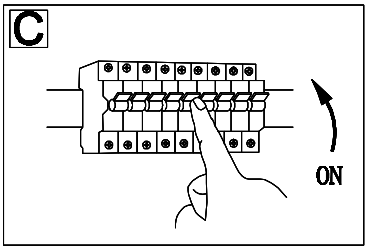

GLOBO Handels GmbH
Gewerbestrasse 3, A-9184 Sankt Peter, AUSTRIA
www.globo-lighting.com | office@globo-lighting.com