22160042/01

XXX LUTZKG
Roemerstrasse 39 AT-4600 Wels
Austria

BESSAGI

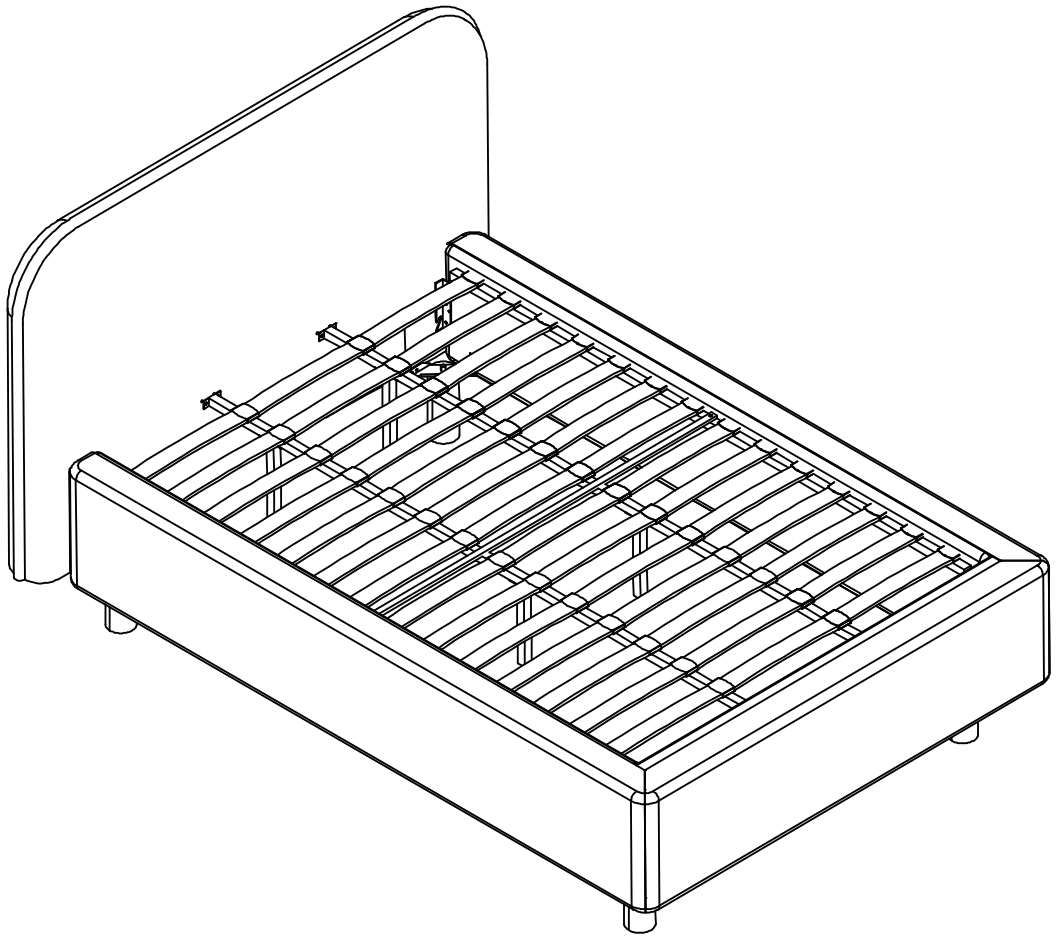





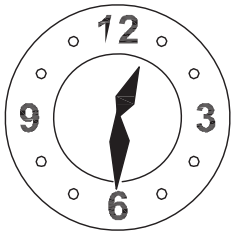

45min



① 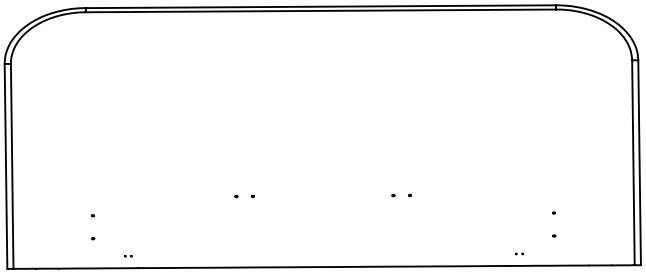 2350x860x210mm 1 PC	⑥ 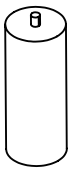 83x83x180mm 4 PCS
② 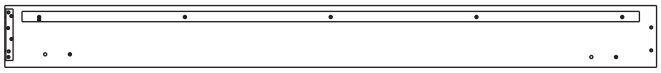 2020x200x95mm 2 PCS	⑦  230x80x25mm 4 PCS
③ 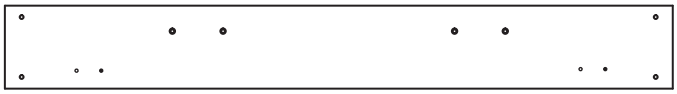 1985x200x90mm 1 PC	⑧  600x53x9mm 42 PCS
④  2020x80x25mm 2 PCS	⑨ 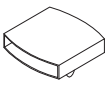 28 PCS
⑤ 1810x20x10mm 1 PC	⑪ 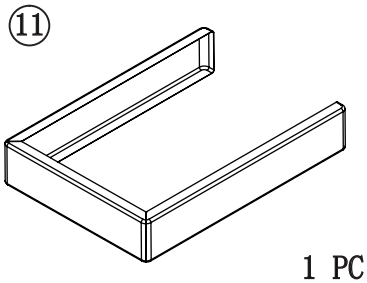 1 PC

Ⓐ 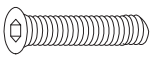 M8 x 25mm 24 PCS	Ⓑ  M6 x 20mm 18 PCS	Ⓒ 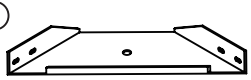 4 PCS	Ⓓ  M4 1 PCS	Ⓔ  M5 1 PCS
Ⓕ  M8 x 40mm 4 PCS	Ⓖ  M6 x 15mm 4 PCS	Ⓗ  M5x14mm 4 PCS	Ⓘ  8 PCS	

1

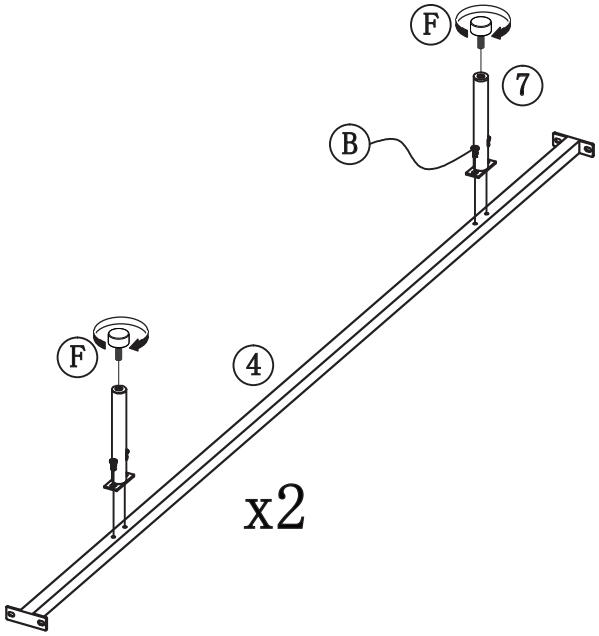
F
7
B
F
4
x2

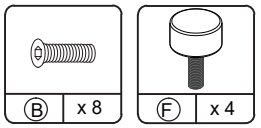
B x 8
F x 4

2

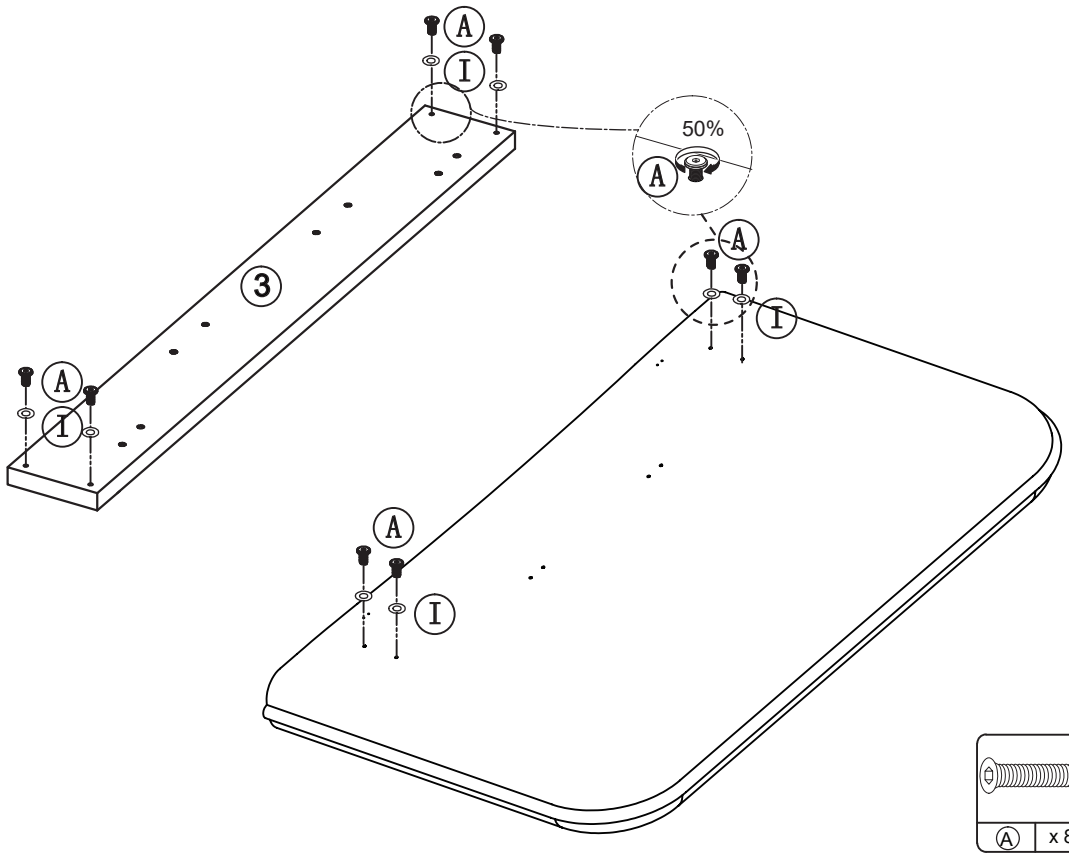
A
I
50%
A
A
3
A
I
A
I

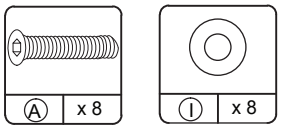
A x 8
I x 8


0 cm 1 2 3 4 5 6 7 8 9 10 11 12 13 14 15

3

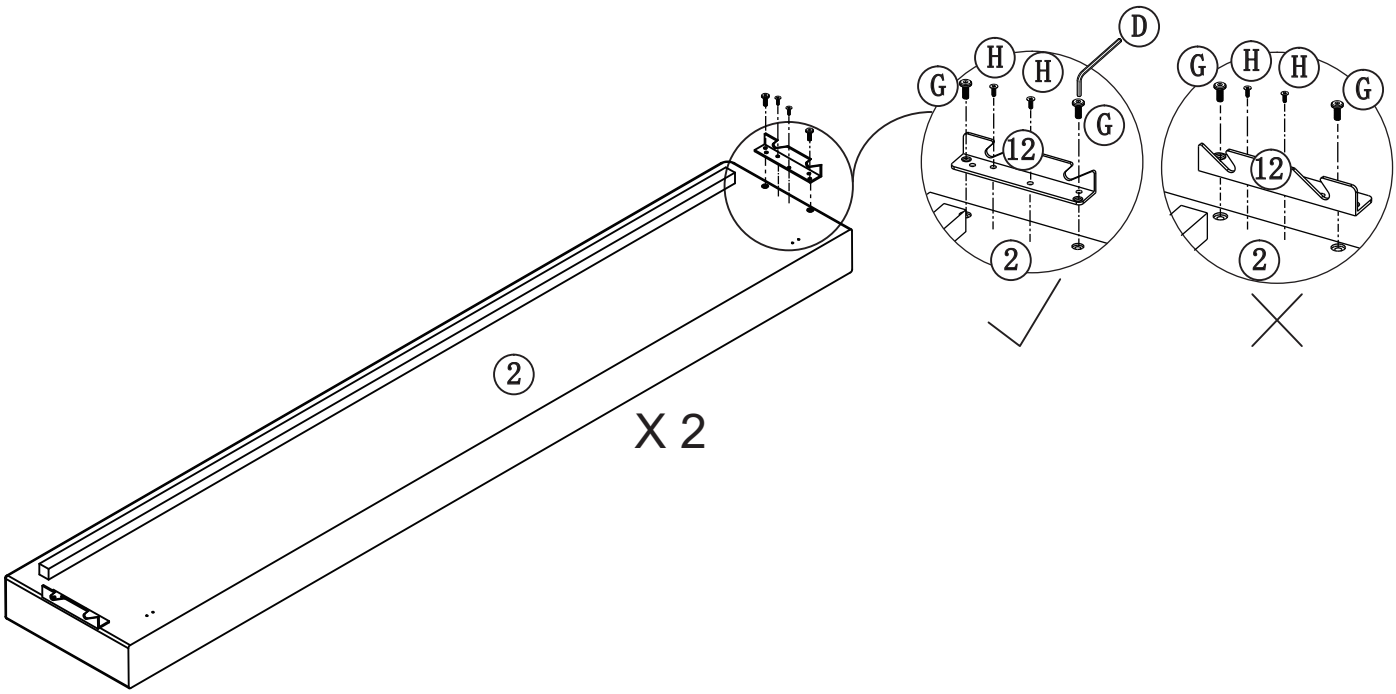

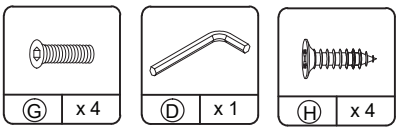

4

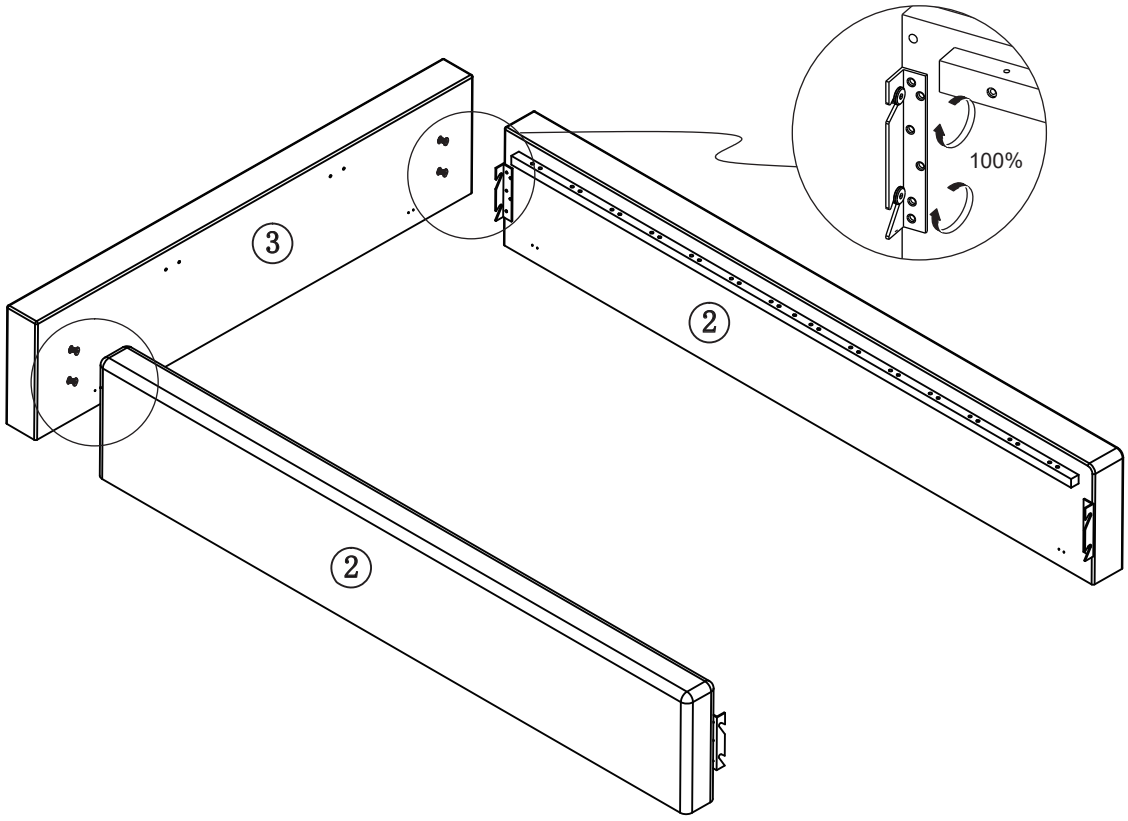



5

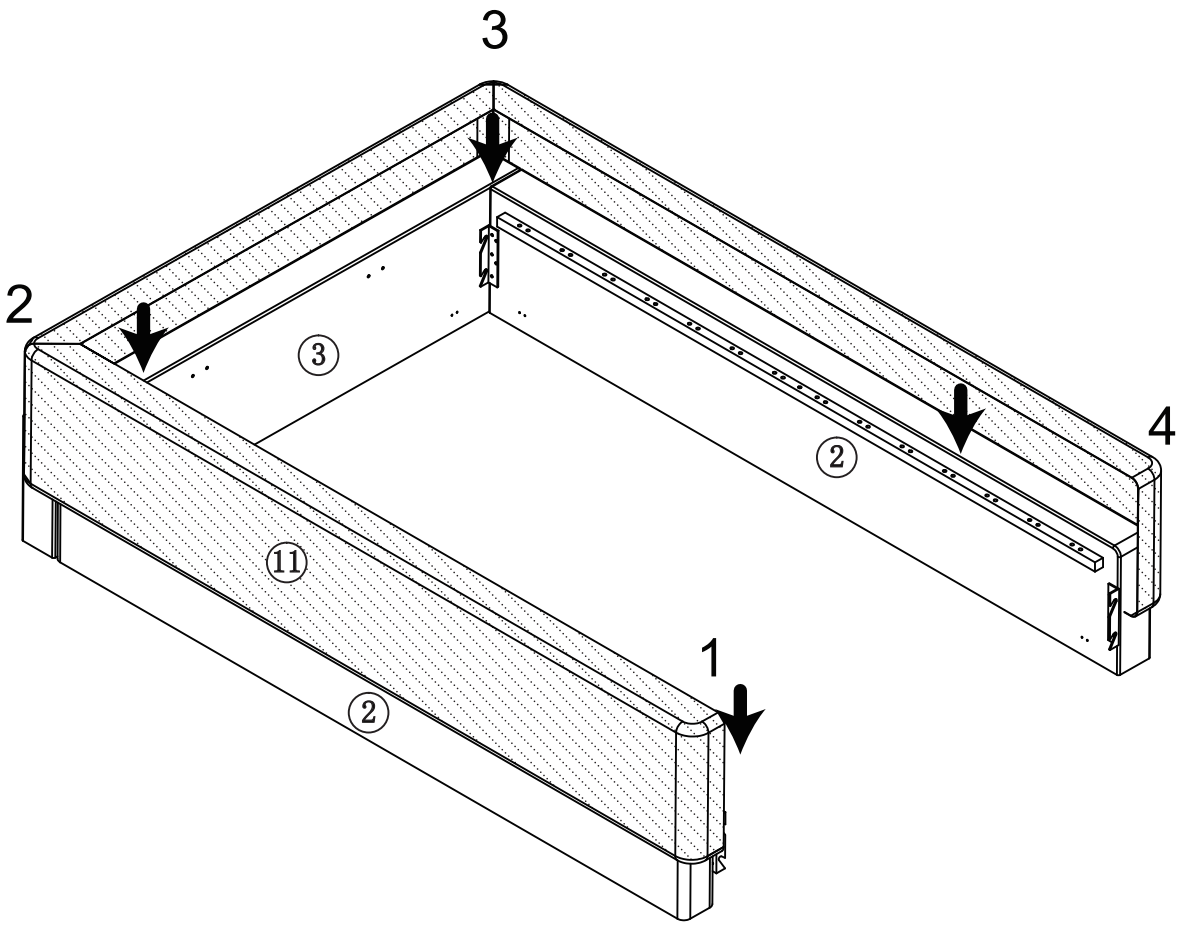

put the cover on the sideboards and footboard from postion 1 to 4

6

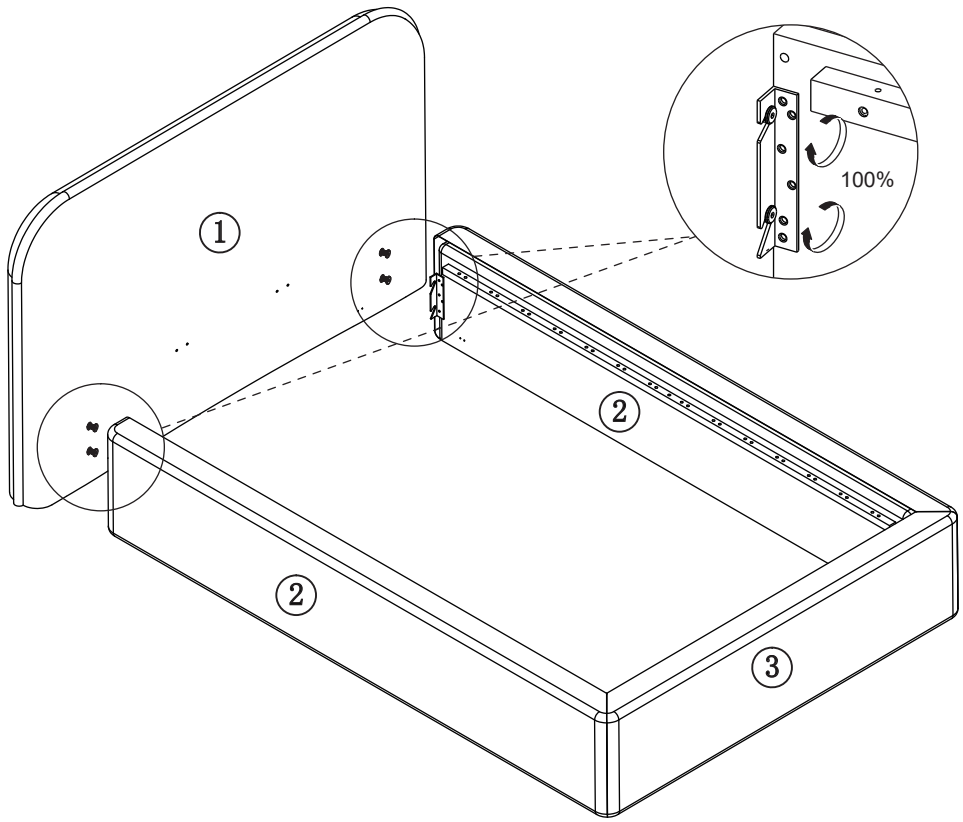



7

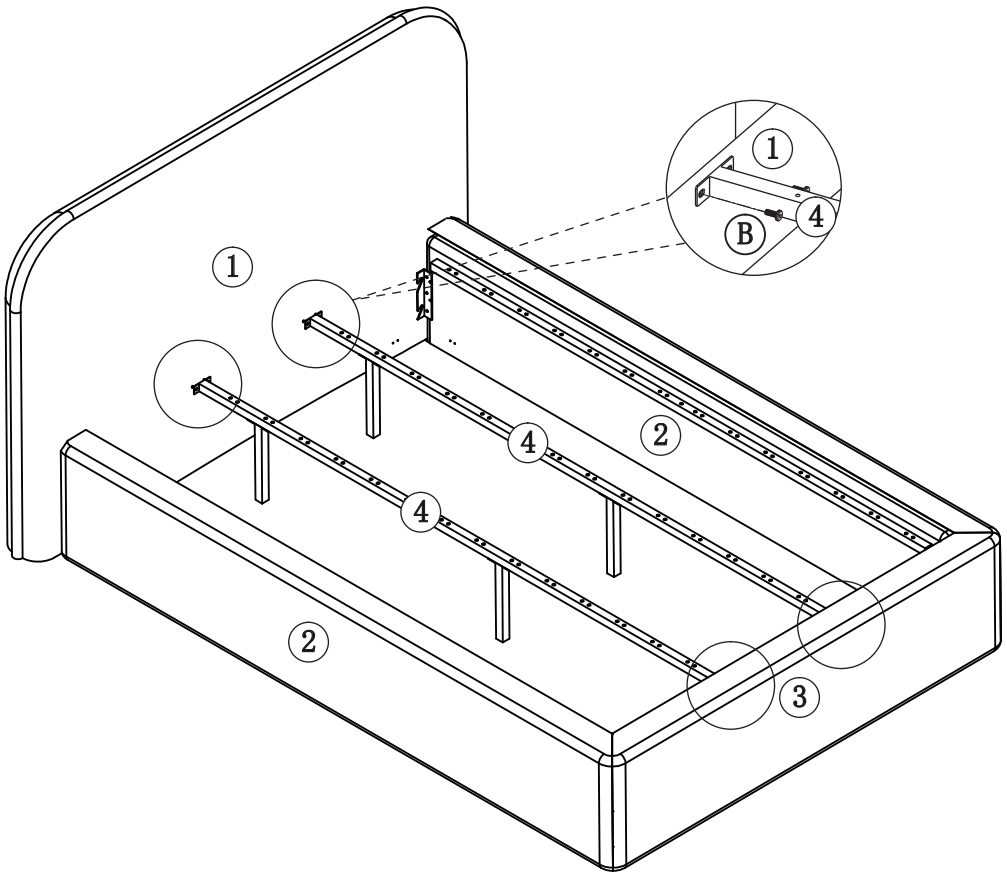

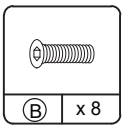

8

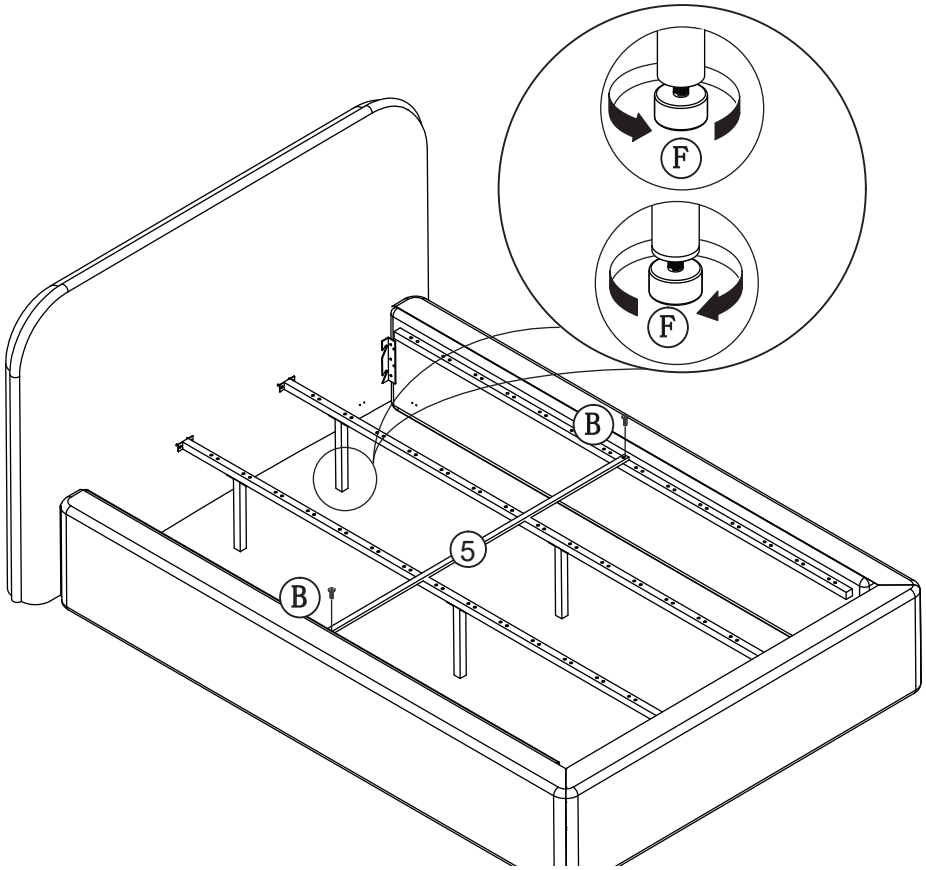

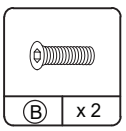



9

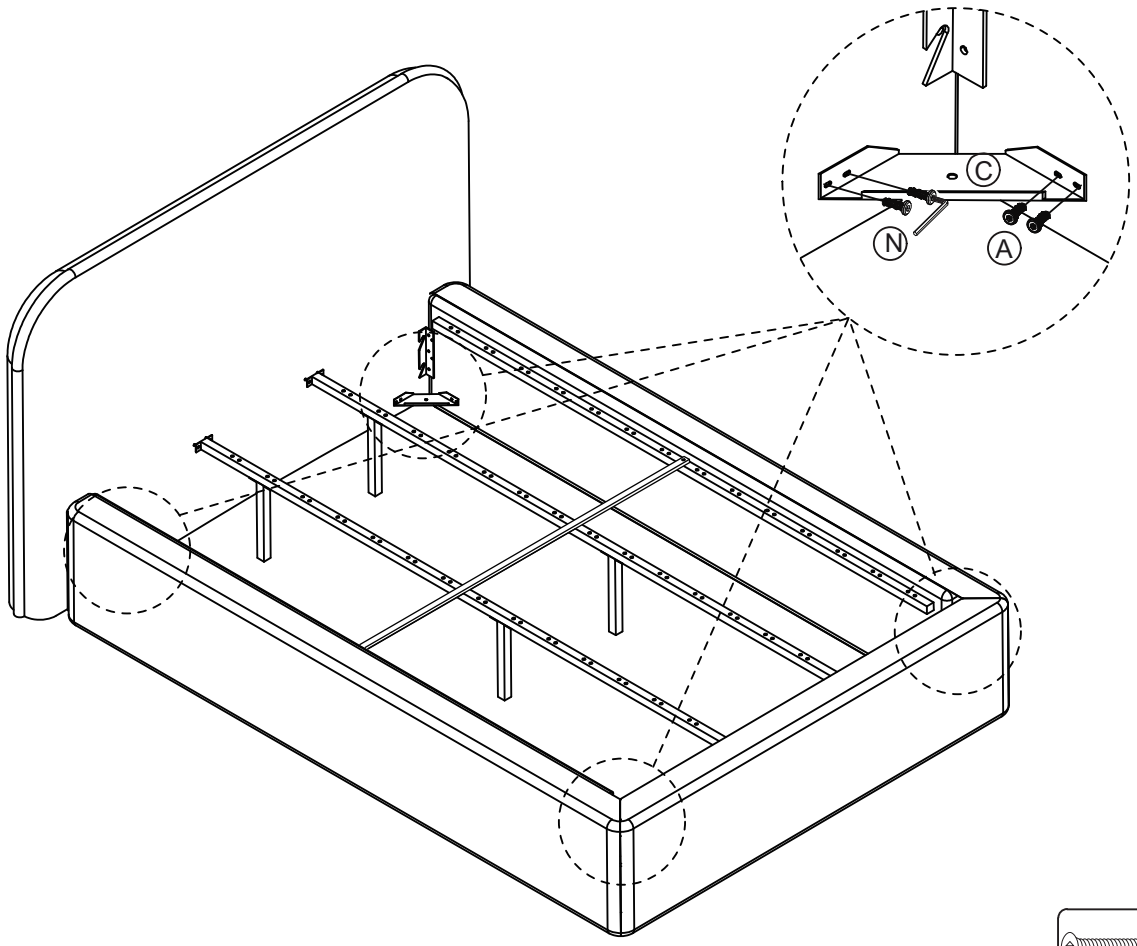

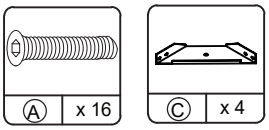

10

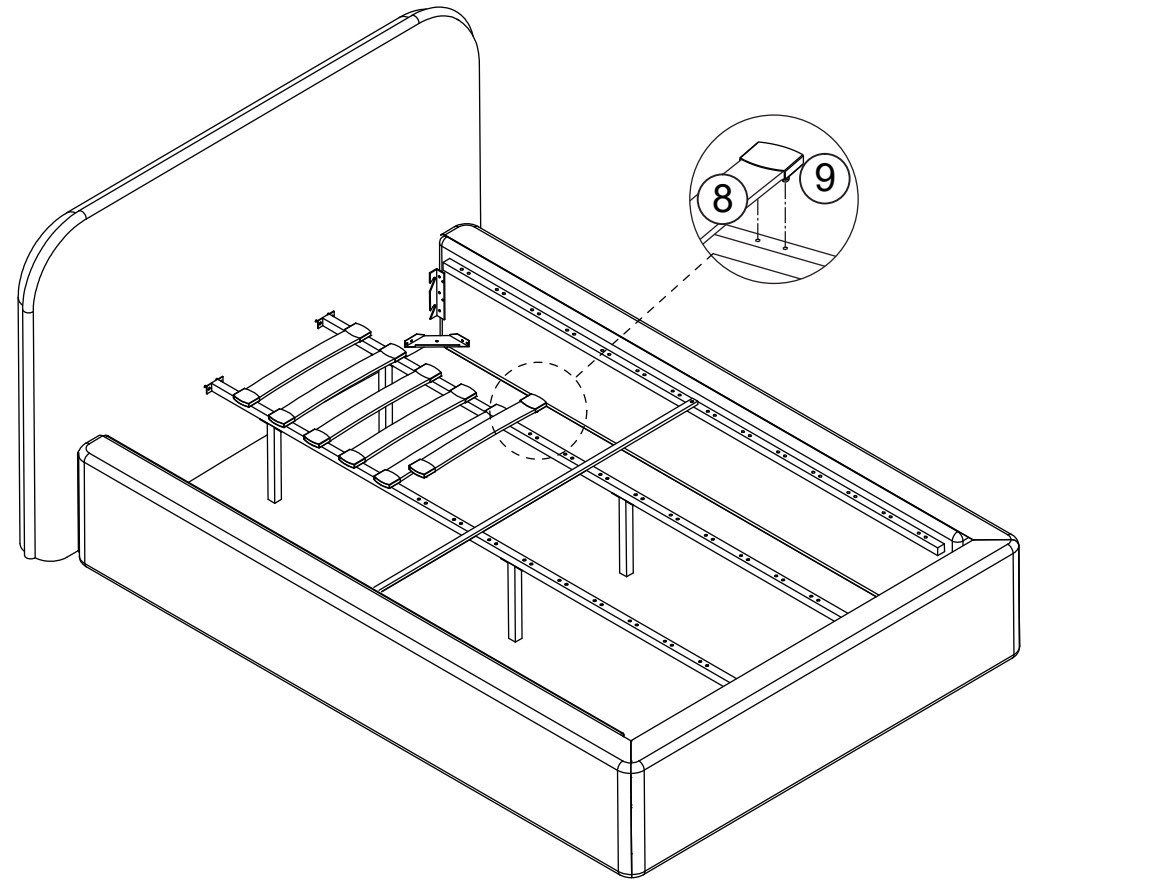



11

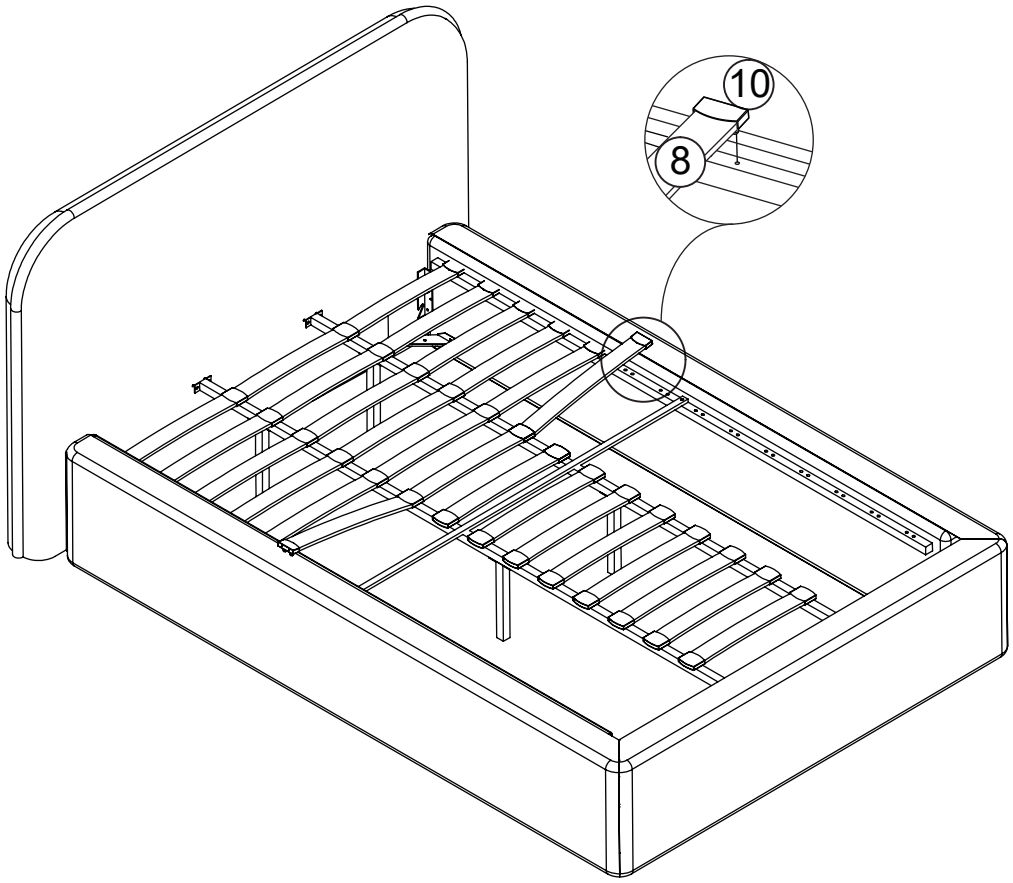

12

