22160044-01

XXX LUTZKG
Roemerstrasse 39
AT-4600 Wels
Austria

BESSAGI

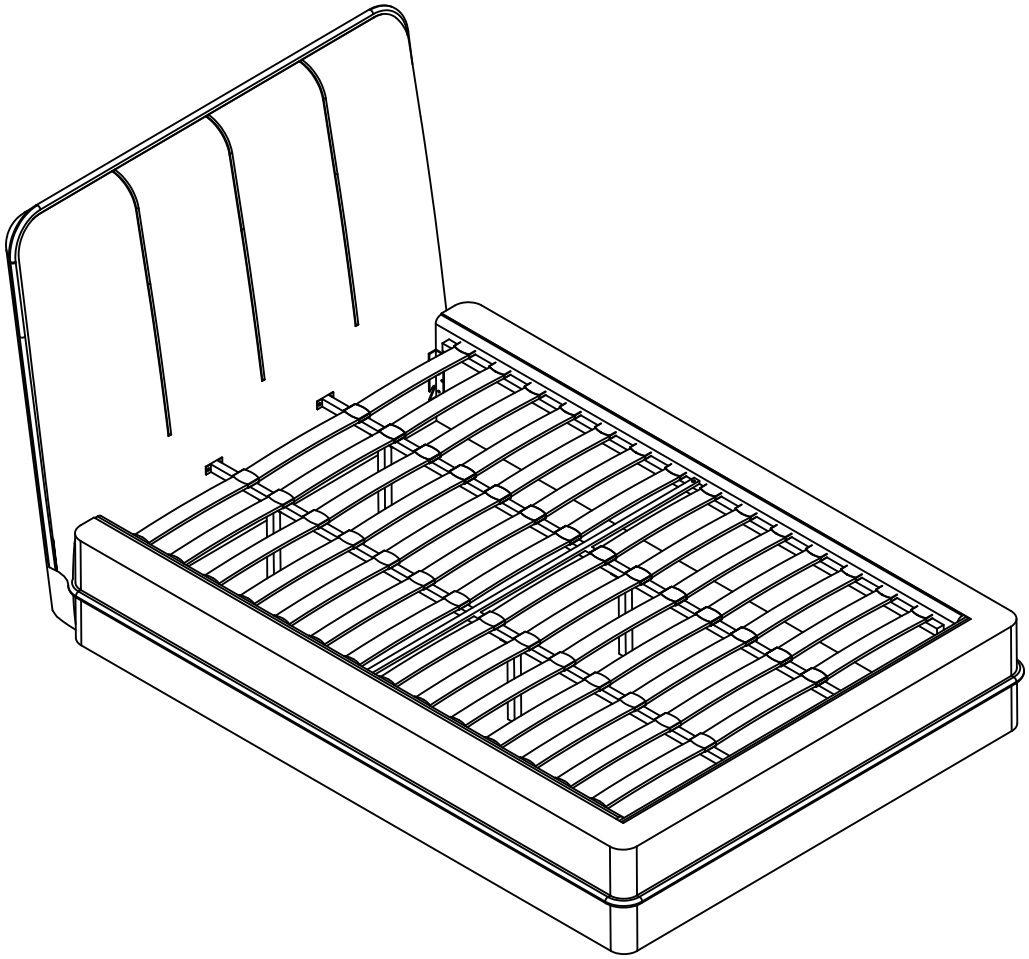





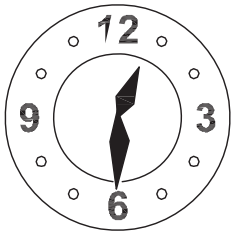

30min



① 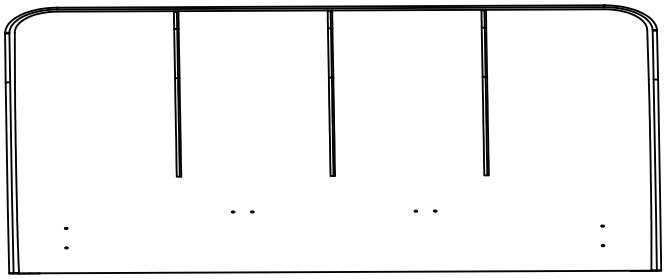 2210x1060x290mm 1 PC	⑥ 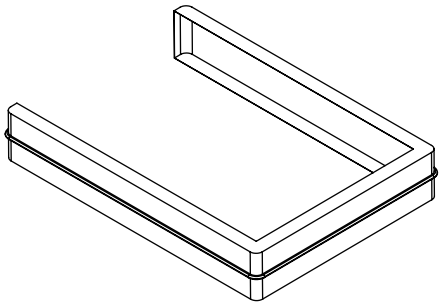 1 PC
② 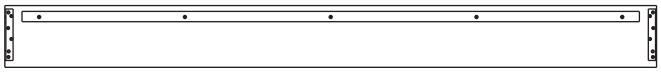 2020x300x190mm 2 PCS	⑦  180x80x25mm 4 PCS
③ 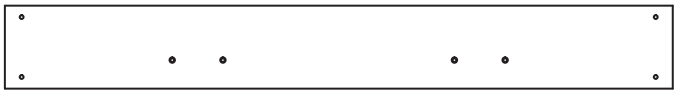 2190x300x190mm 1 PC	⑧  595x53x9mm 42 PCS
④  2020x80x25mm 2 PCS	⑨ 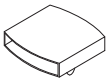 28 PCS
⑤ 1810x20x10mm 1 PC	⑩  28 PCS

Ⓐ 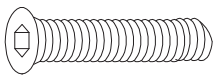 M8 x 25mm 8 PCS	Ⓑ 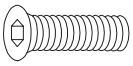 M6 x 20mm 18 PCS	Ⓒ 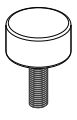 M8 x 40mm 4 PCS
Ⓓ  M4 1 PCS	Ⓔ 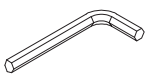 M5 1 PCS	Ⓕ  8 PCS



1

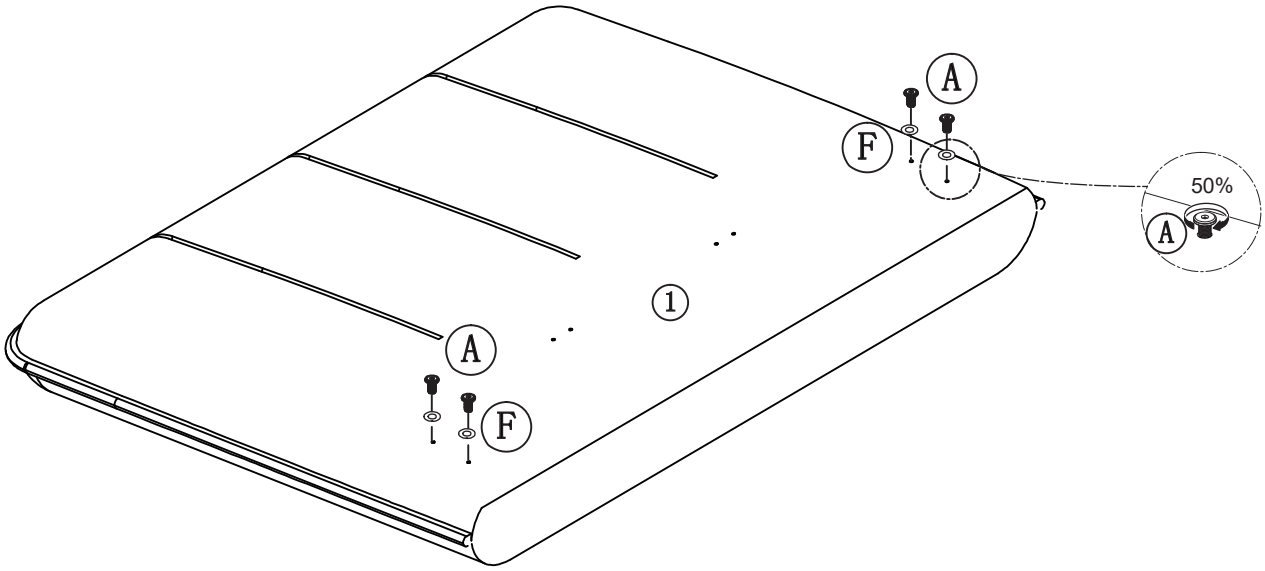
A
F
50%
A
1
A
F

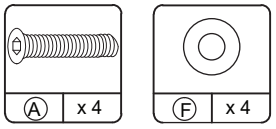
A x 4
F x 4

2

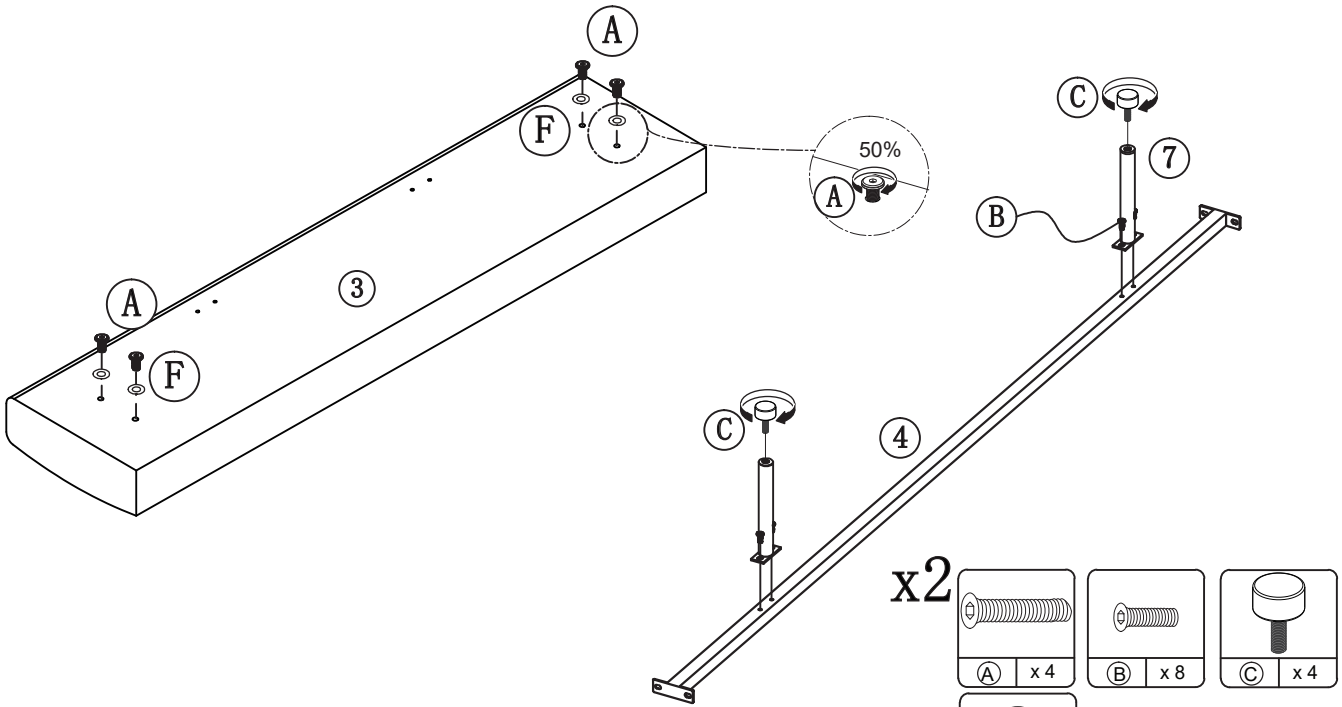
A
F
50%
A
3
A
F
C
7
B
C
4
x2
A x 4
B x 8
C x 4
F x 4


0 cm 1 2 3 4 5 6 7 8 9 10 11 12 13 14 15

3

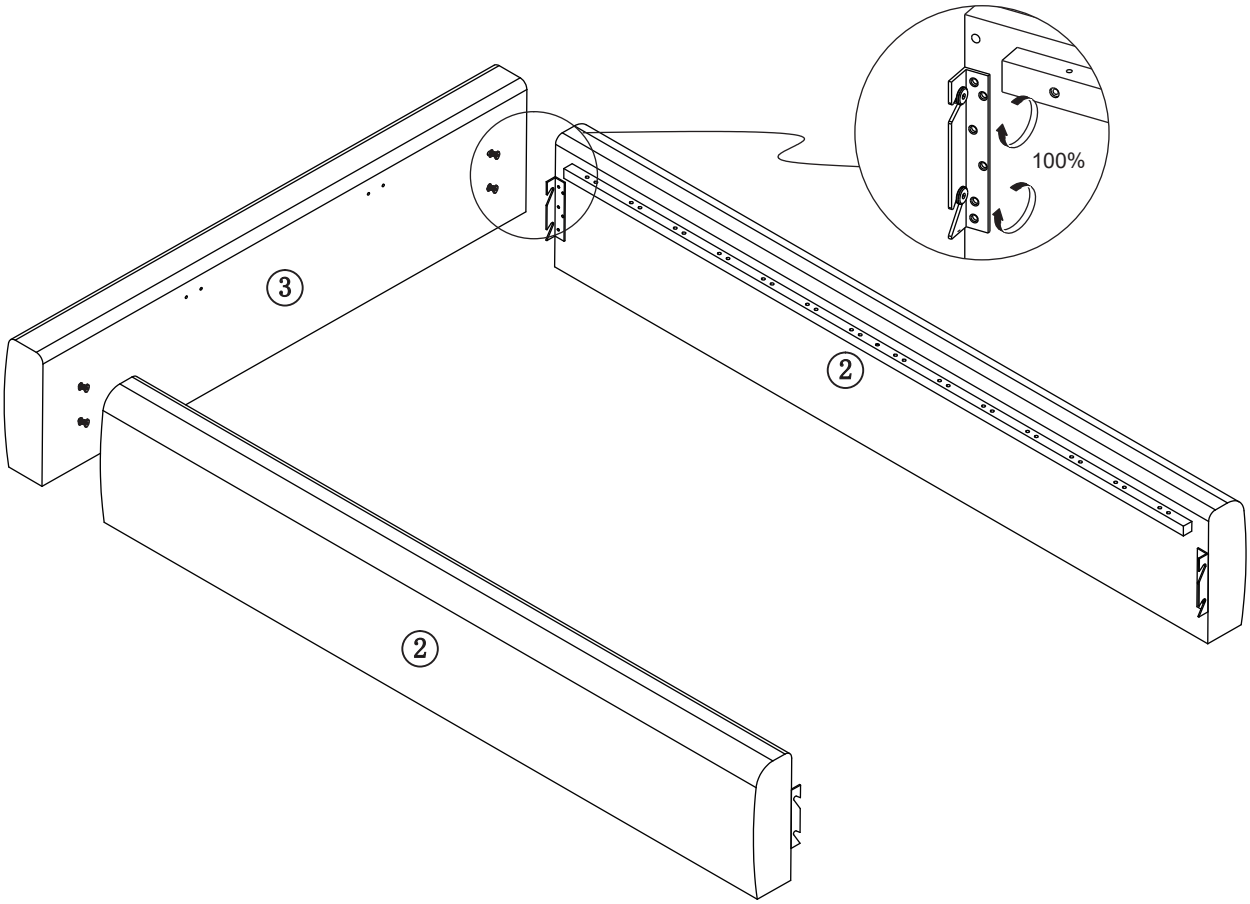

4

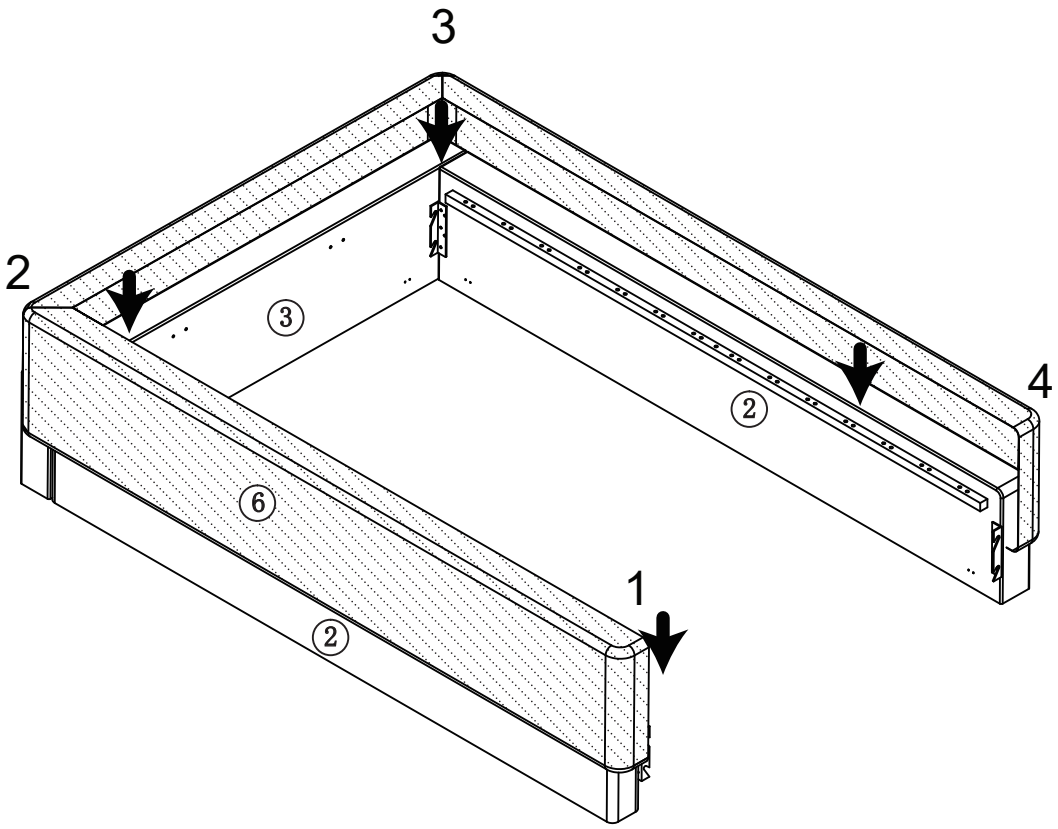

put the cover on the sideboards and footboard from postion 1 to 4



5

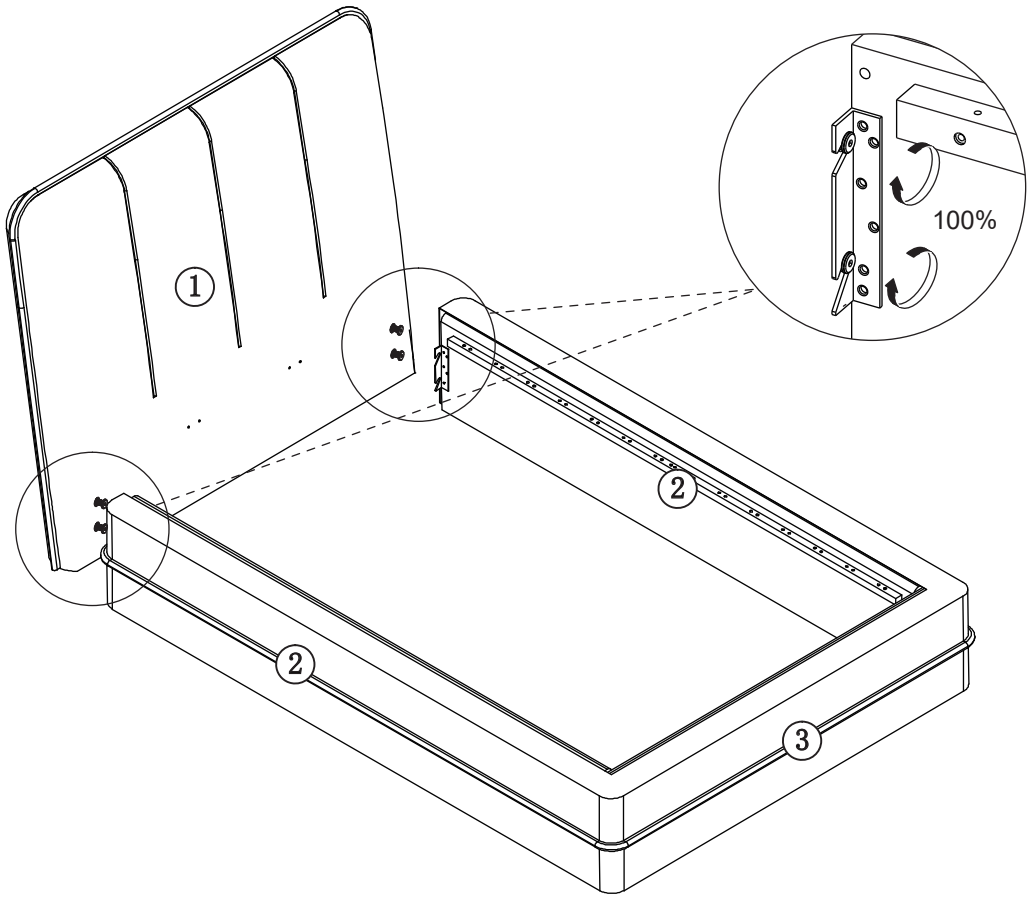

6

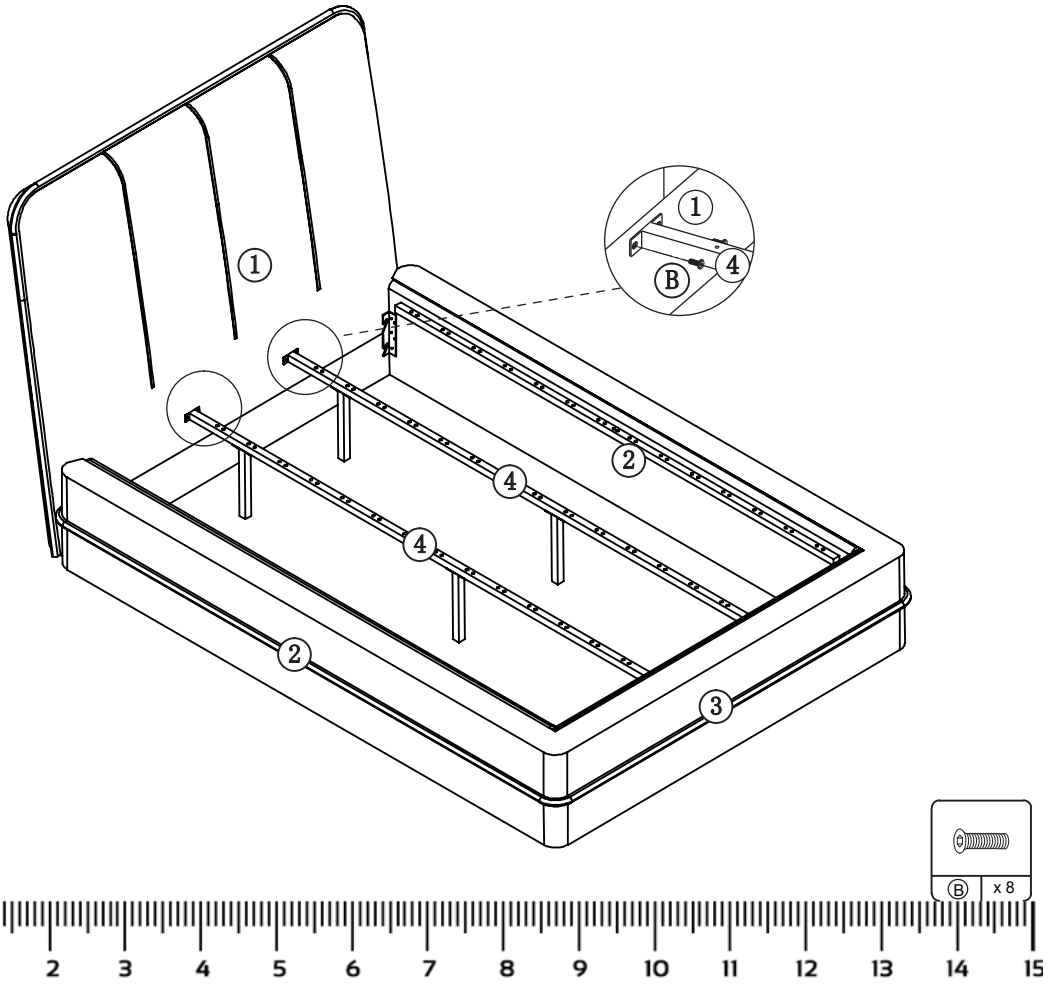

7

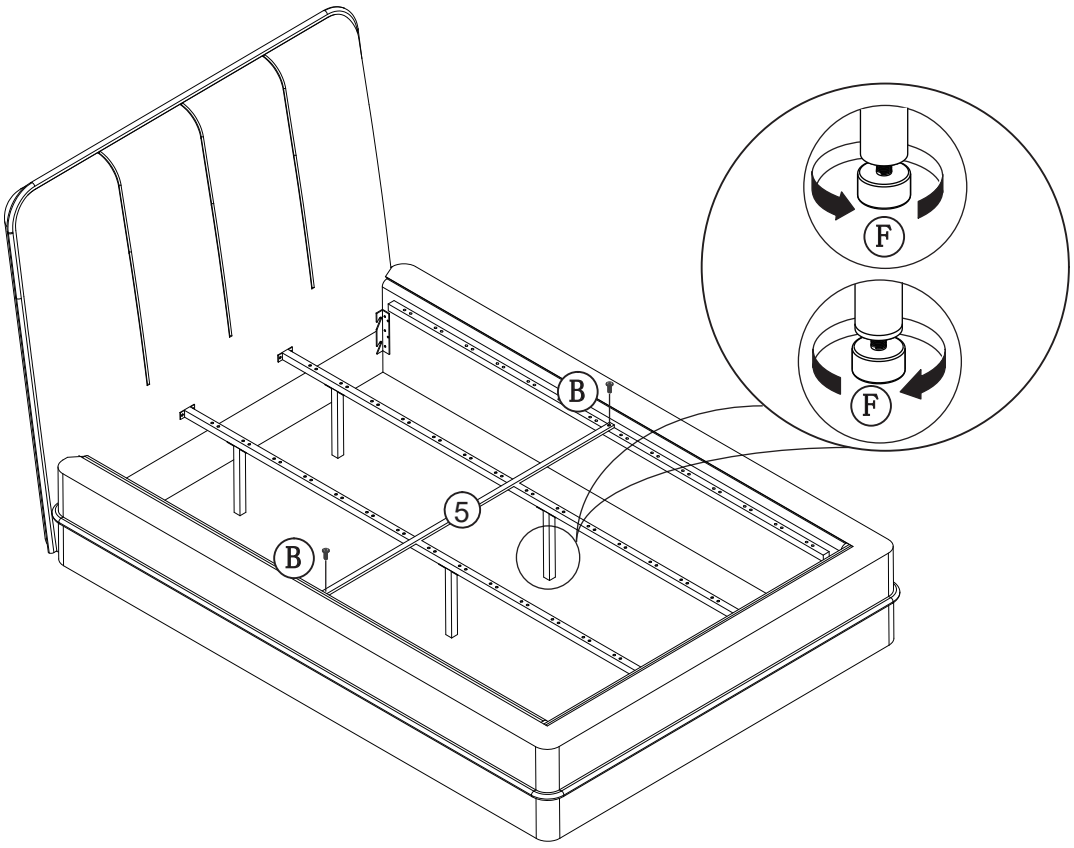

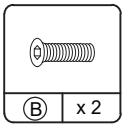

8

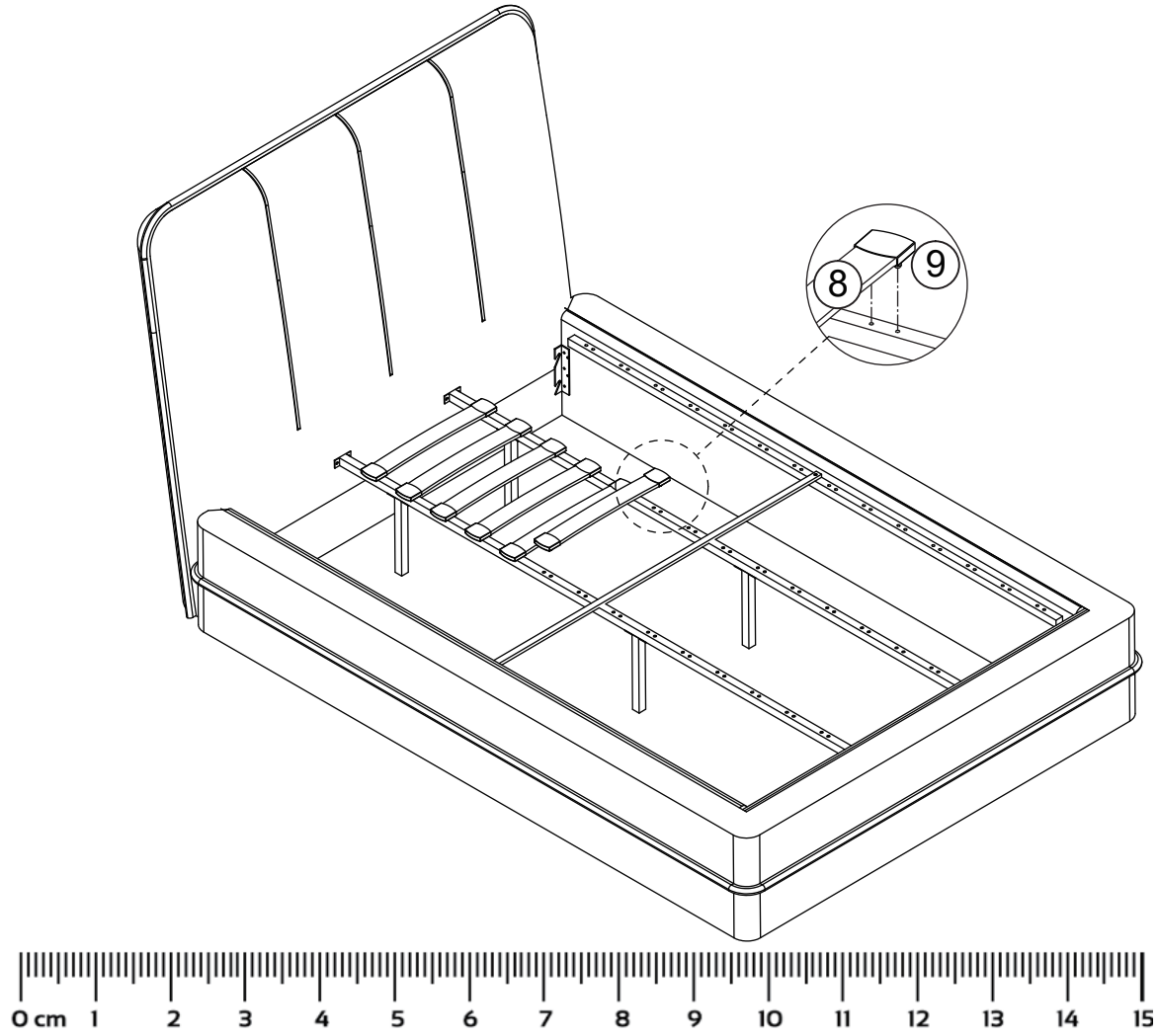

9

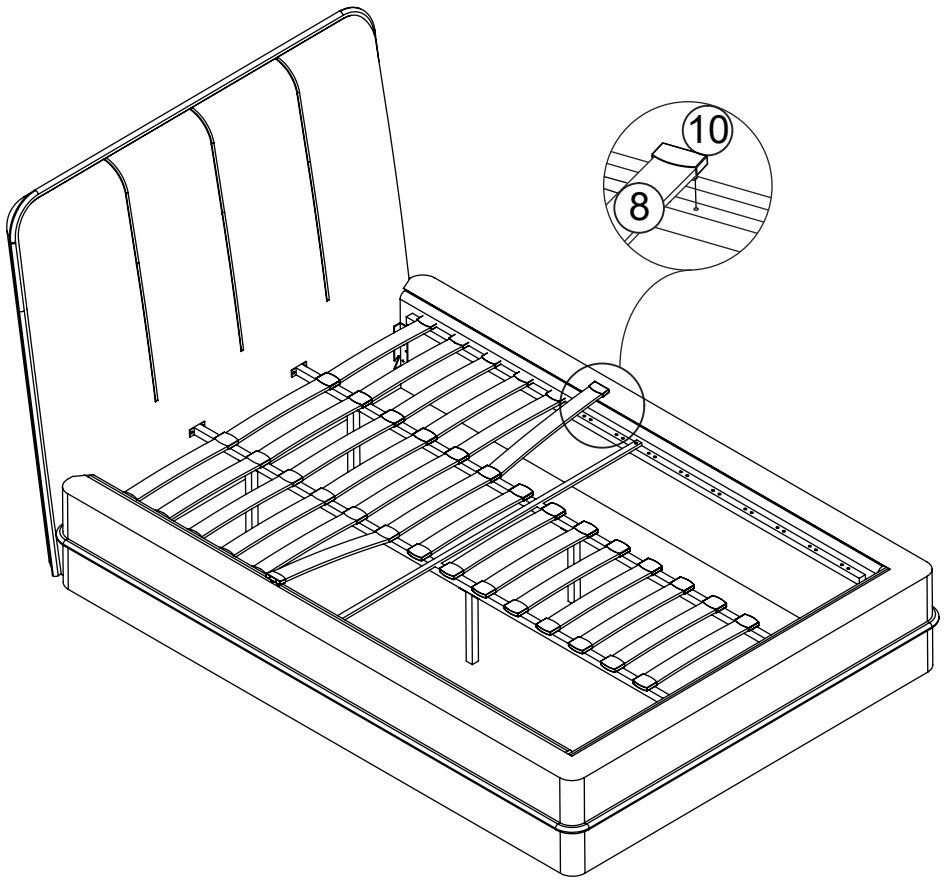

10

