# Assembly Instructions

Thank you for purchasing this quality product. Be sure to check all packing material carefully for small parts that may have come loose inside the carton during shipment.

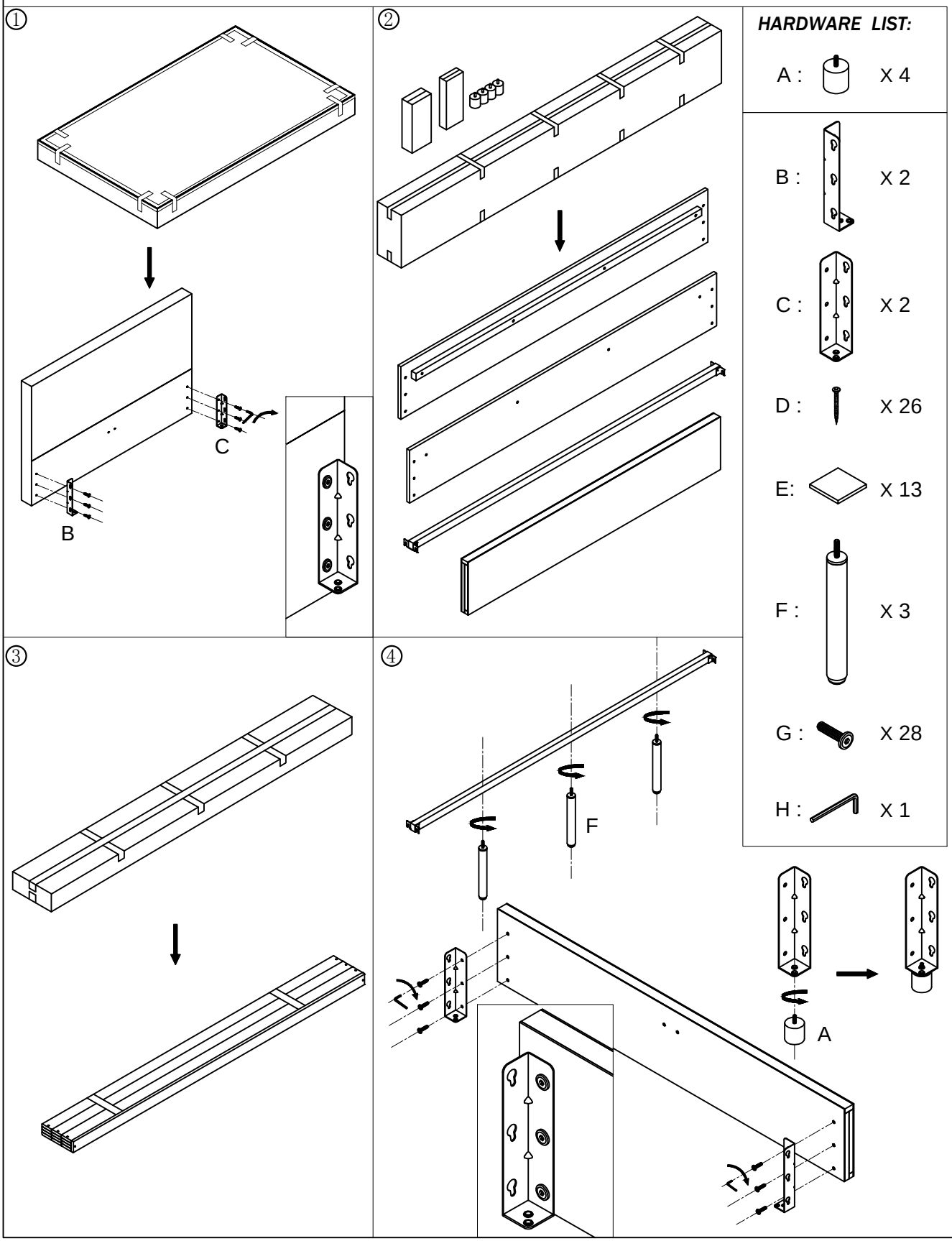

# Assembly Instructions

Thank you for purchasing this quality product. Be sure to check all packing material carefully for small parts that may have come loose inside the carton during shipment.

⑤

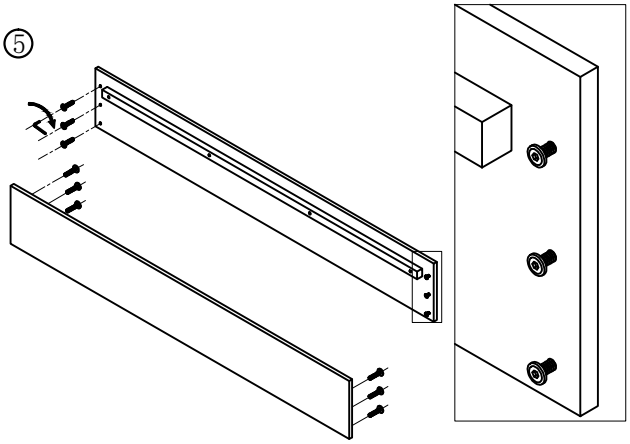

⑥

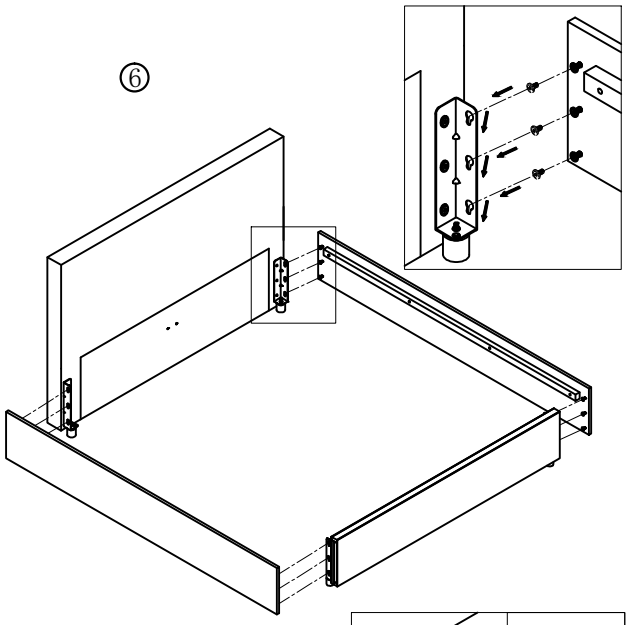

⑦

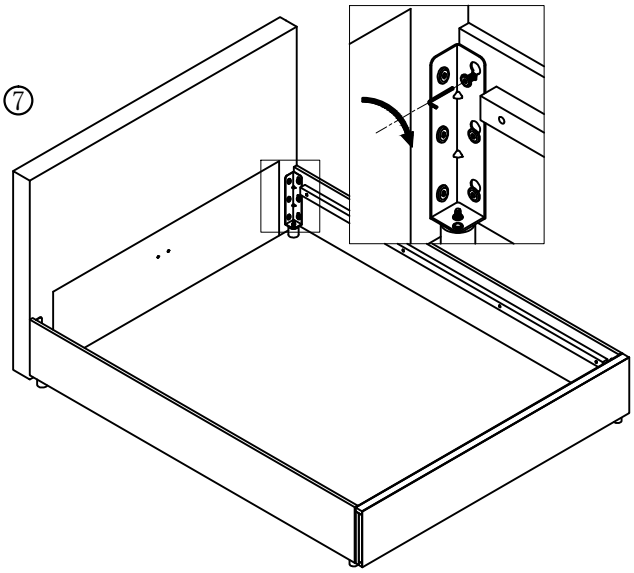

⑧

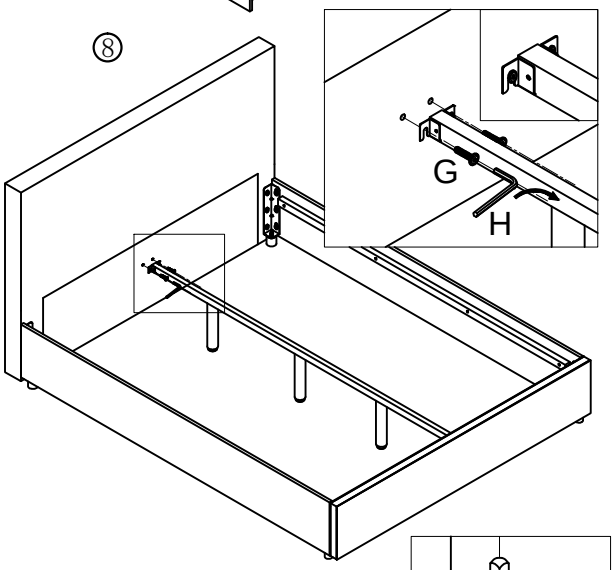


⑨

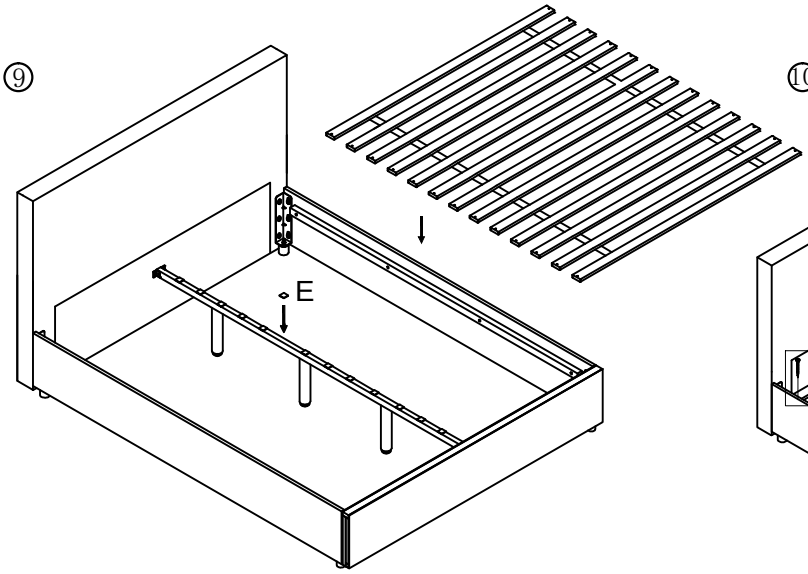

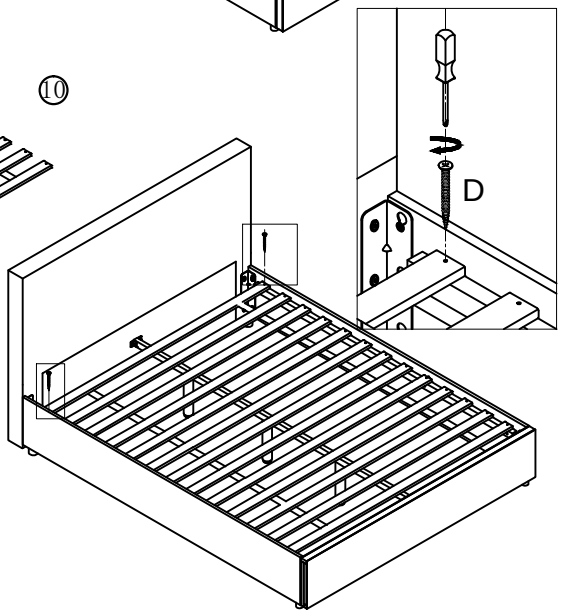
⑩