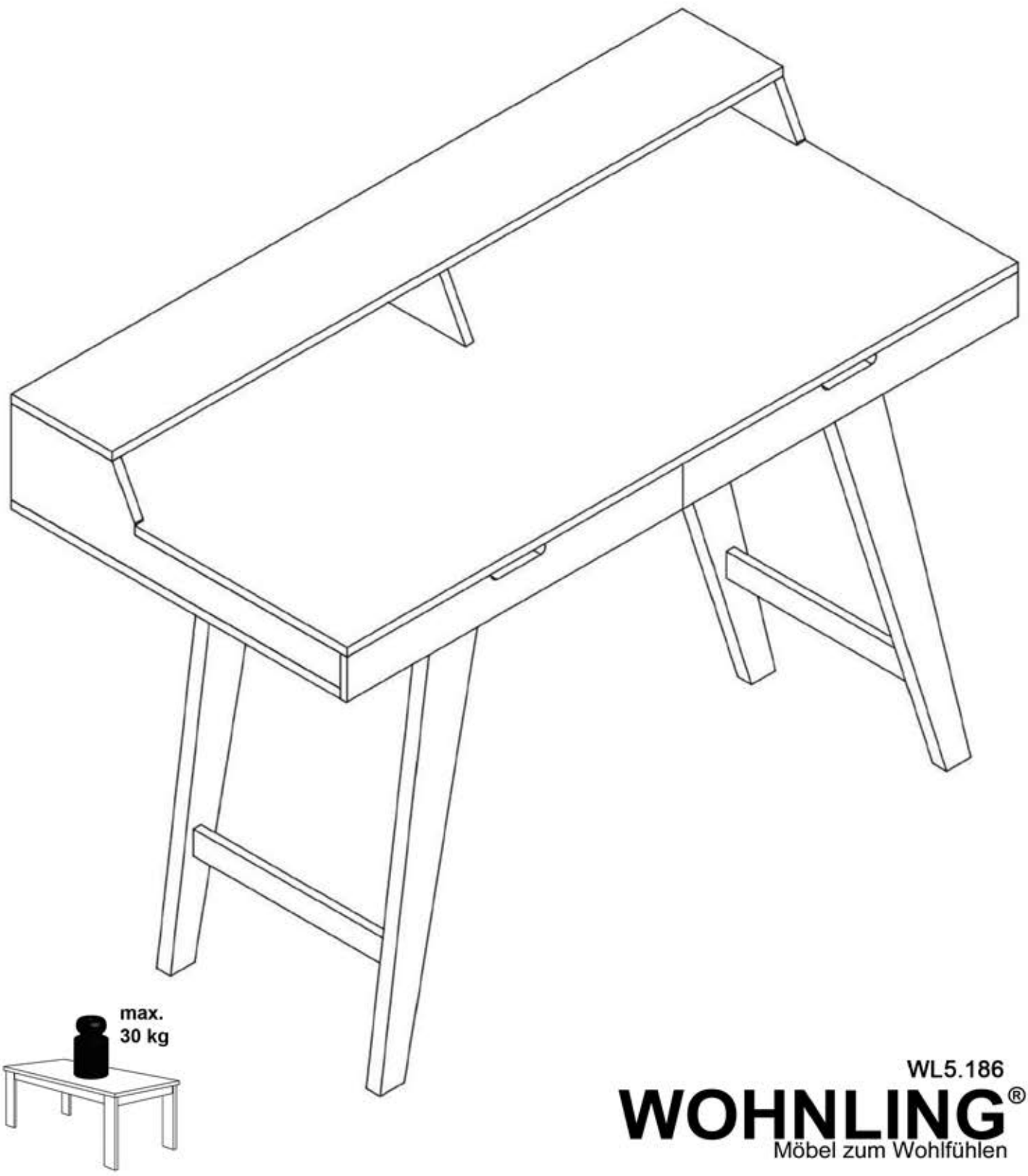

WL5.186

WOHNLING®

Möbel zum Wohlfühlen

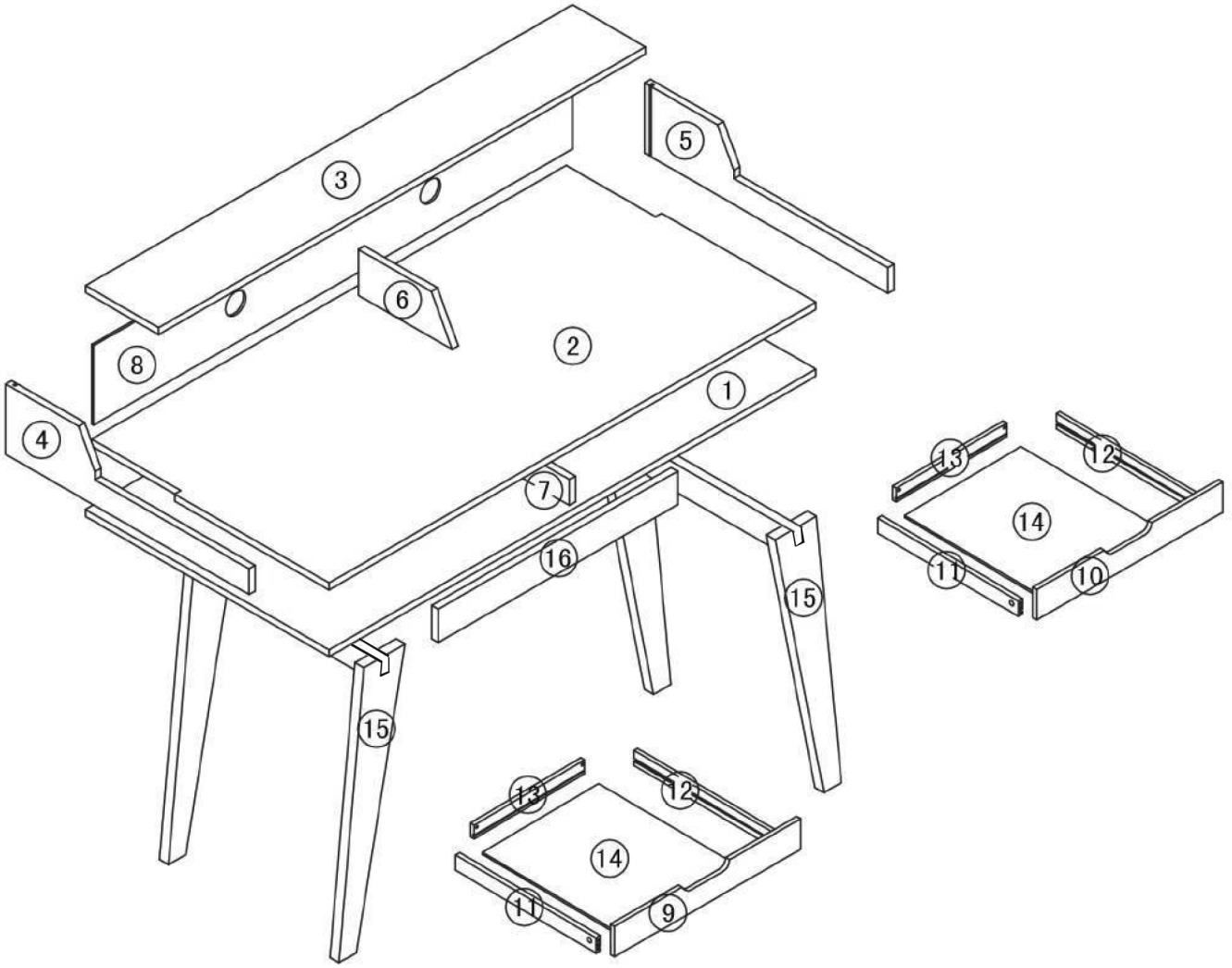
1
2
3
4
5
6
7
8
9
10
11
12
13
14
15
16

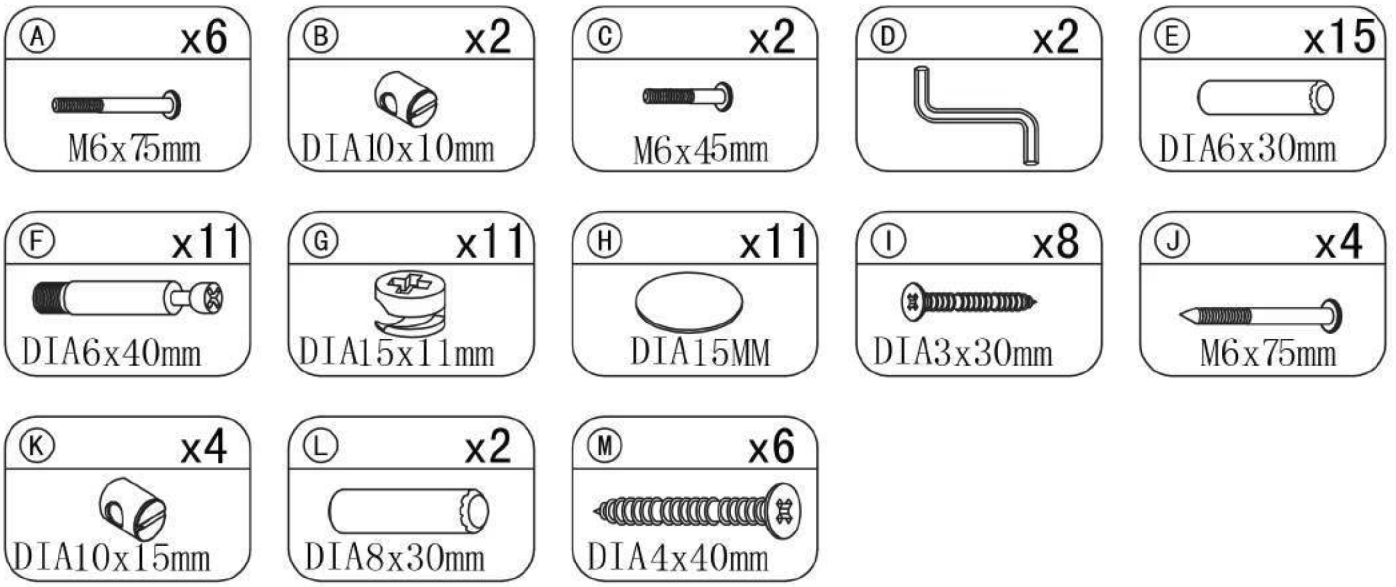
A x6
M6x75mm
B x2
DIA10x10mm
C x2
M6x45mm
D x2
E x15
DIA6x30mm
F x11
DIA6x40mm
G x11
DIA15x11mm
H x11
DIA15MM
I x8
DIA3x30mm
J x4
M6x75mm
K x4
DIA10x15mm
L x2
DIA8x30mm
M x6
DIA4x40mm

Step1

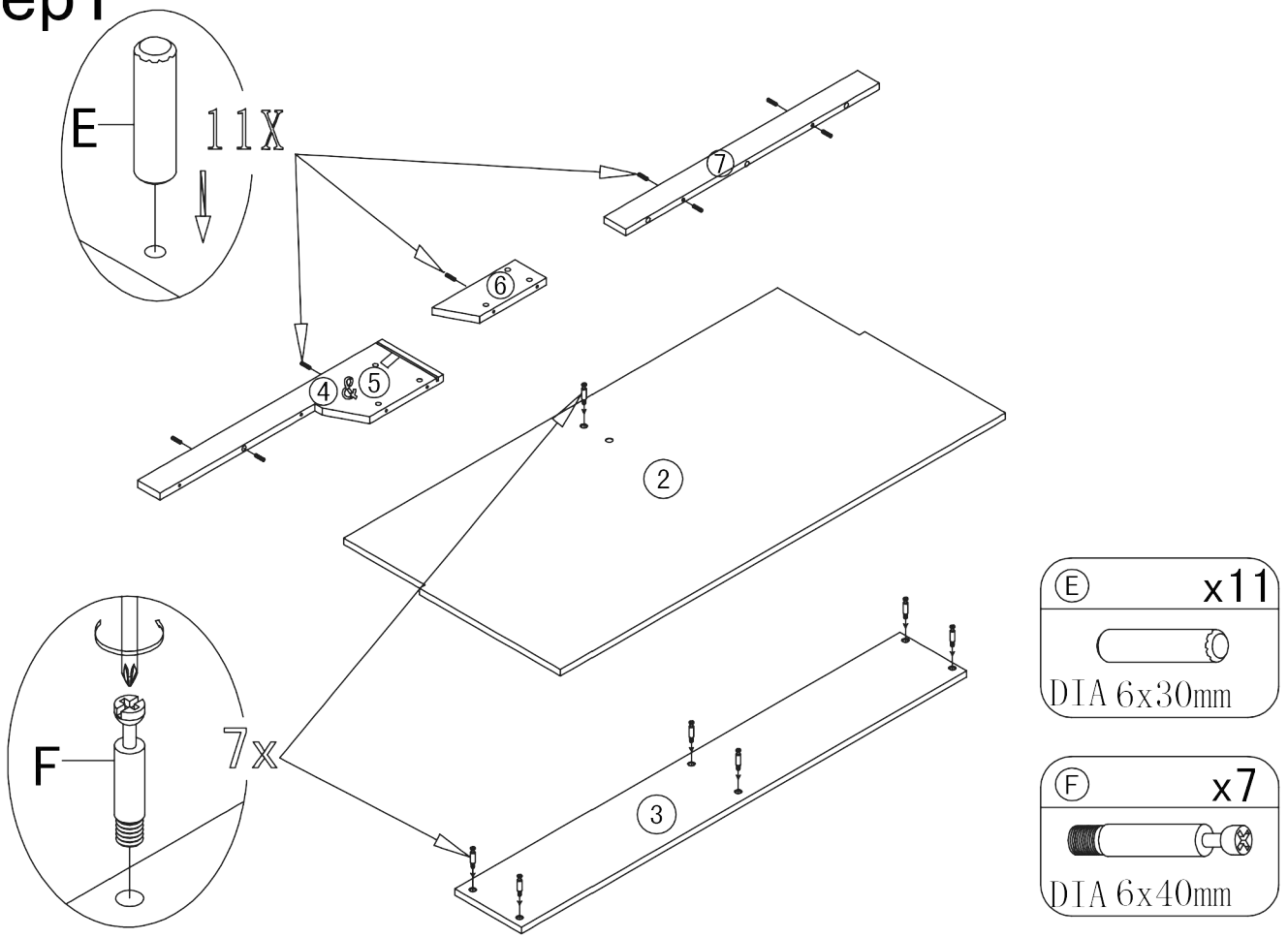

Step2

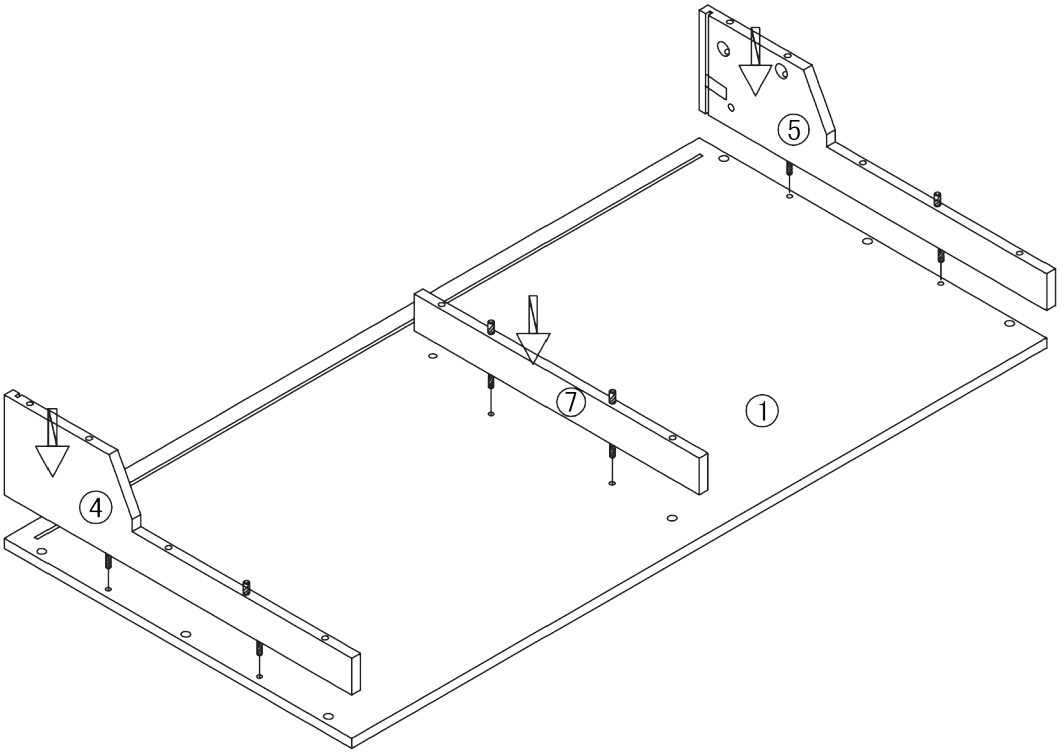

Step3

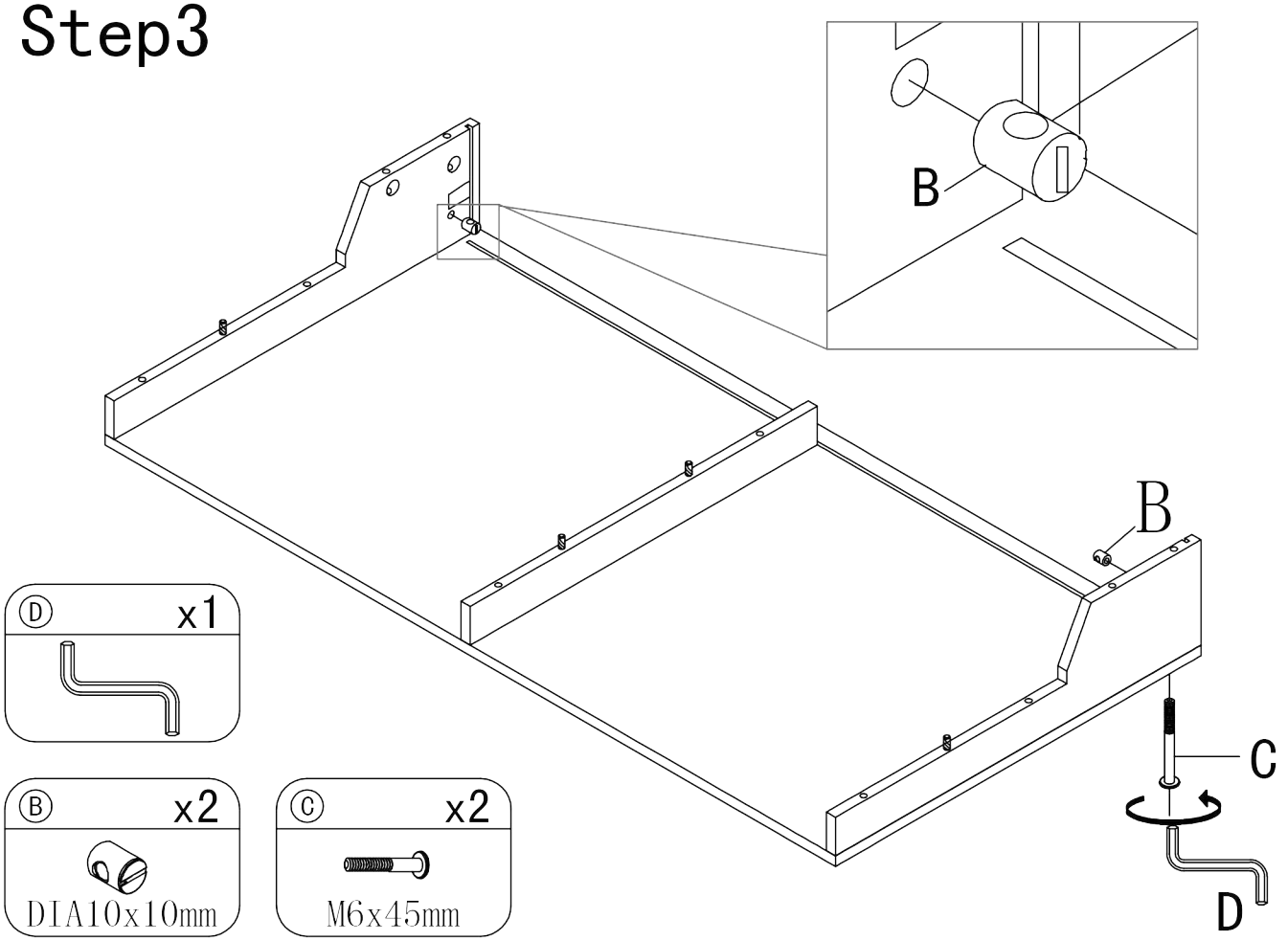

Step4

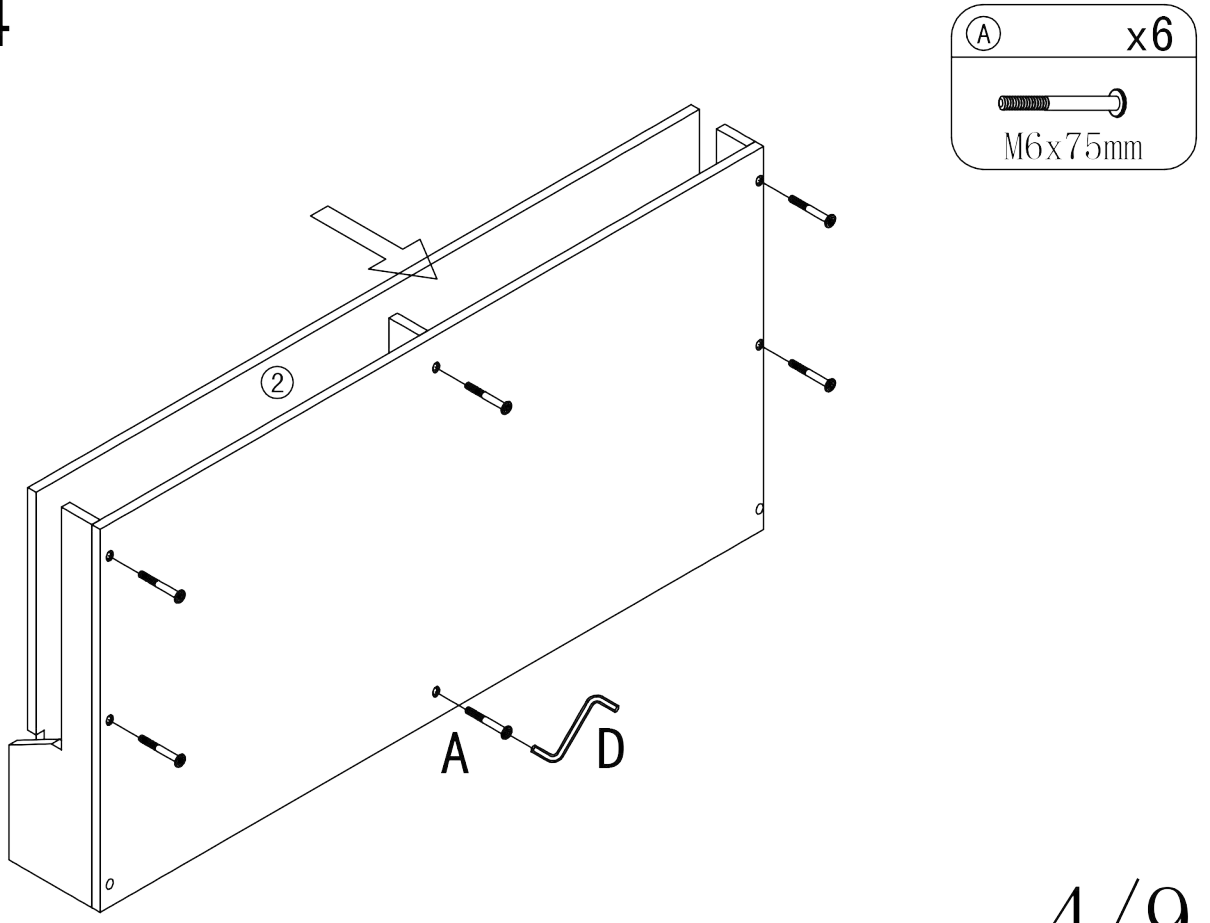

Step5

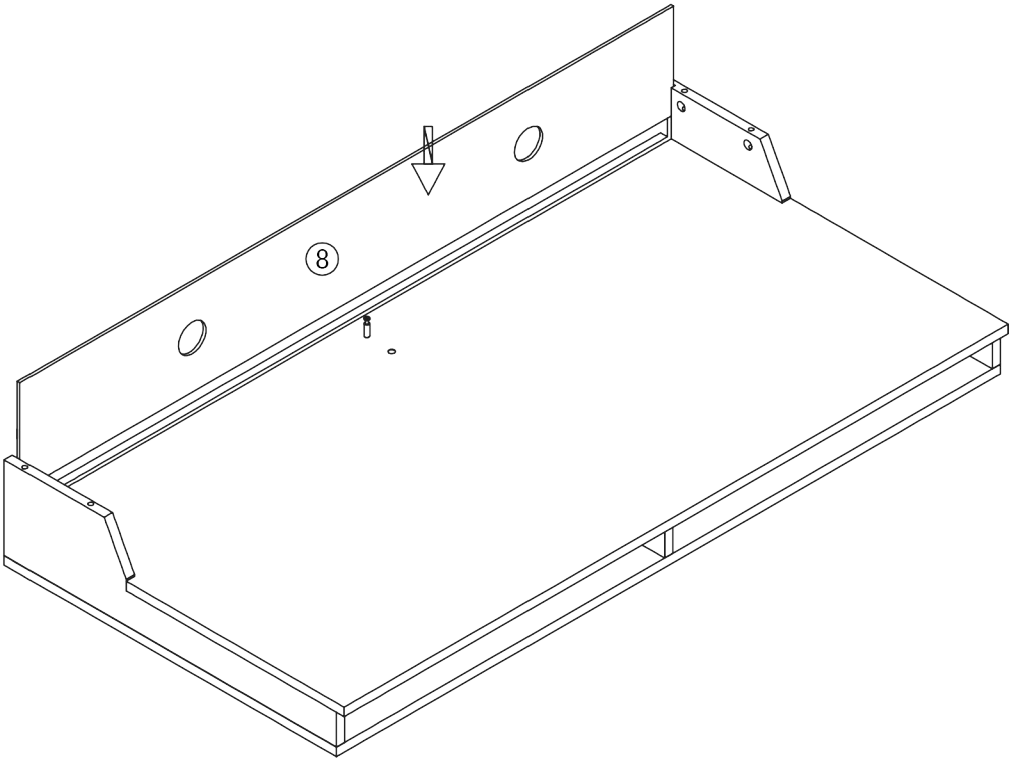

Step6

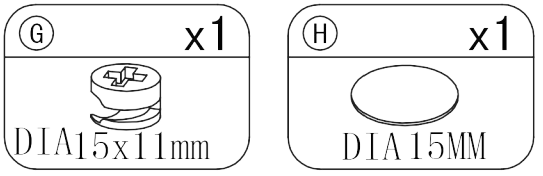

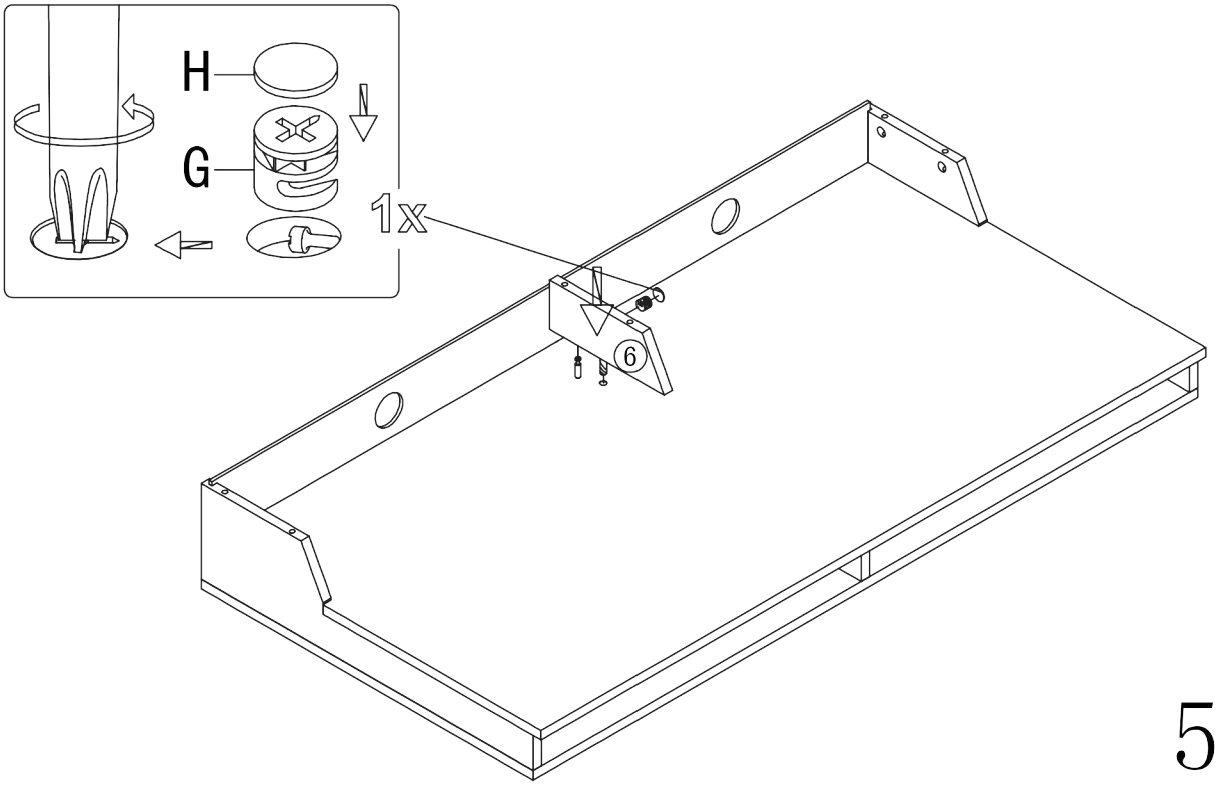

Step7

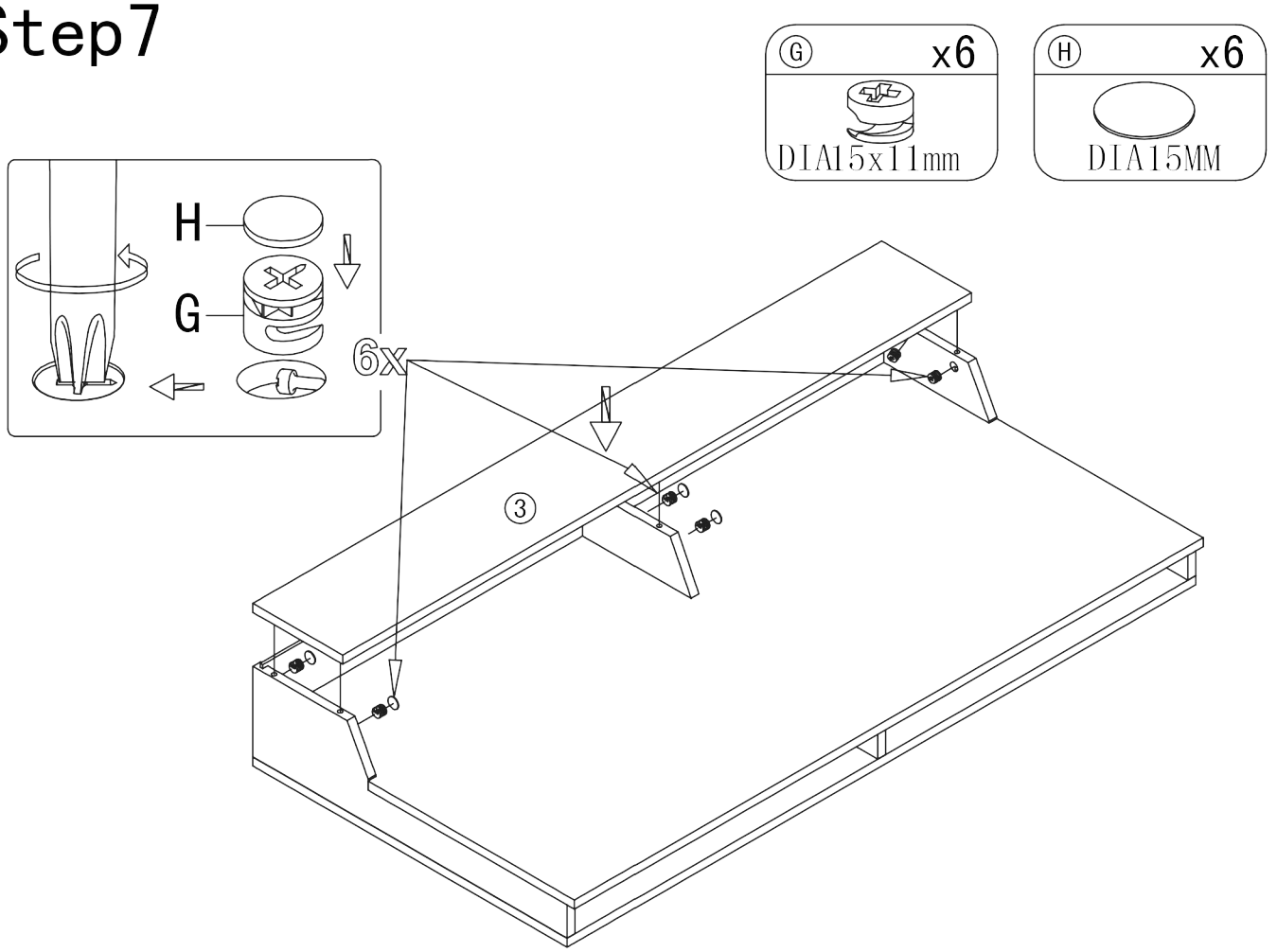
G x6
DIA15x11mm
H x6
DIA15MM
H
G
6x
3

Step8

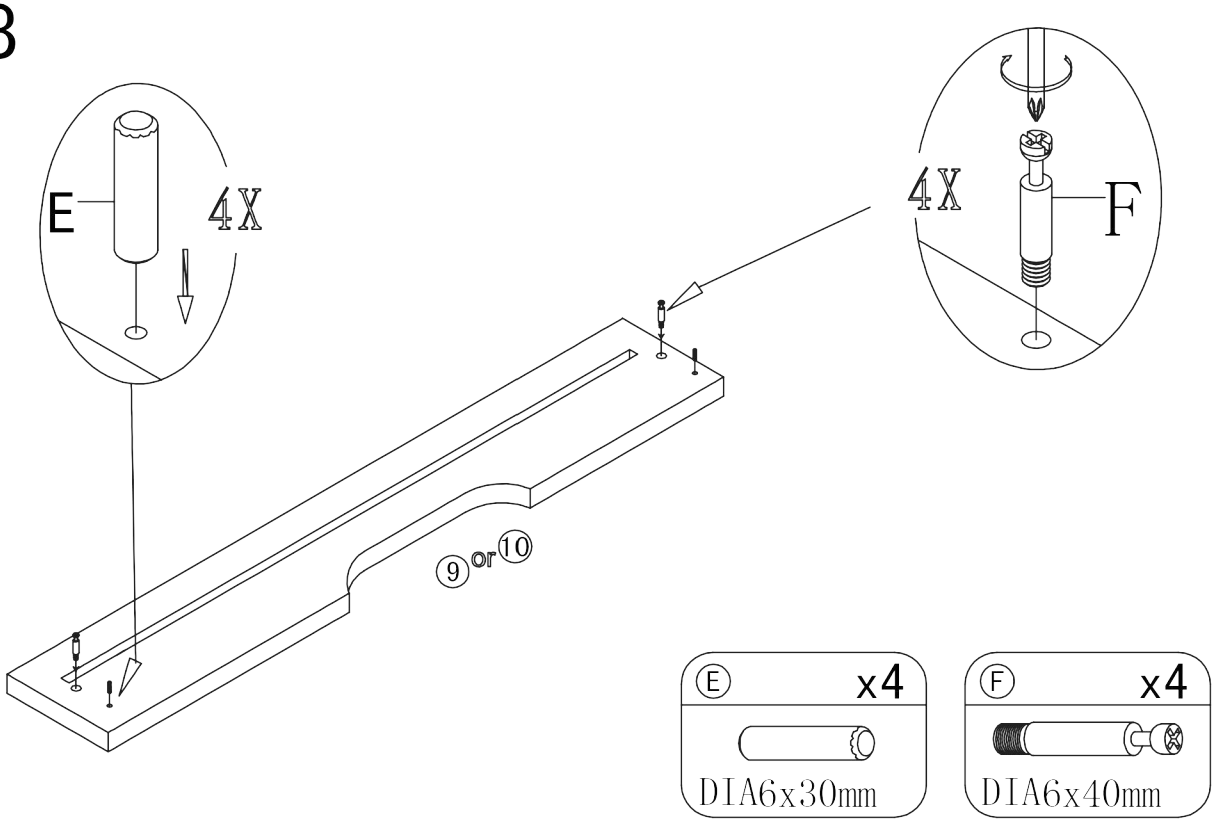
E
4X
4X
F
9 or 10
E x4
DIA6x30mm
F x4
DIA6x40mm

Step9

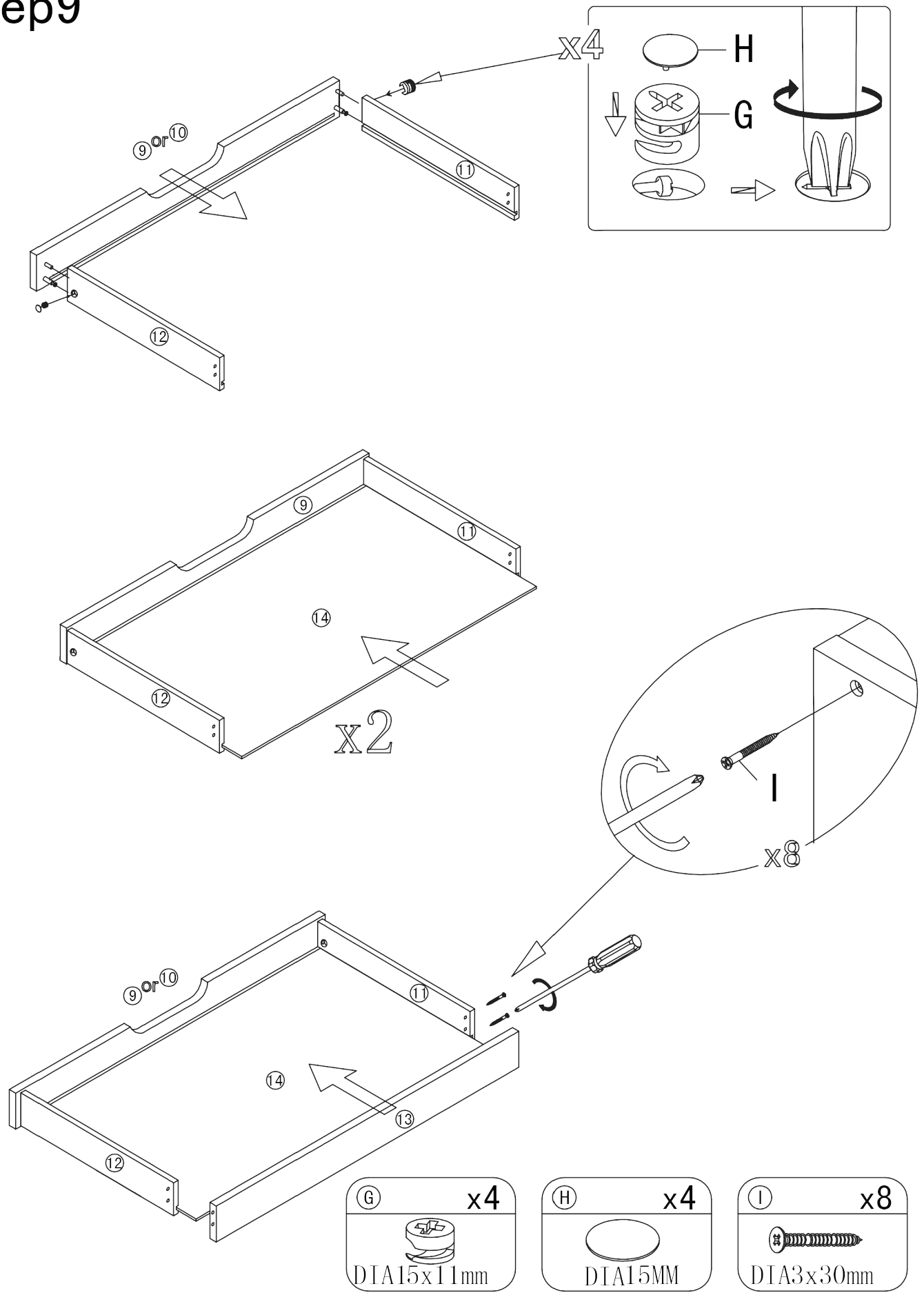
x4
H
G
9 or 10
11
12
9
11
14
12
x2
I
x8
9 or 10
11
14
13
12
G x4
DIA15x11mm
H x4
DIA15MM
I x8
DIA3x30mm

Step10

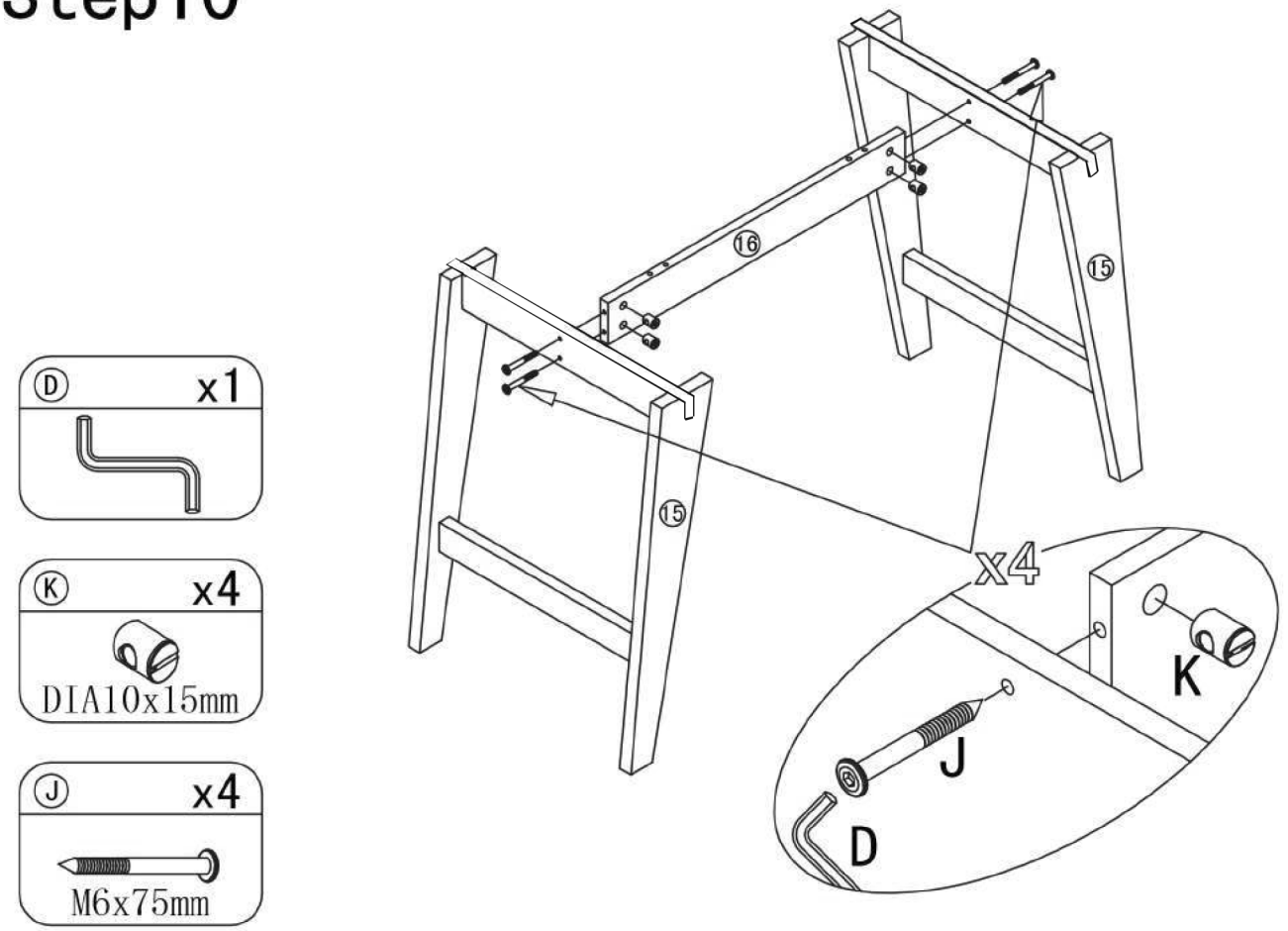

Step11

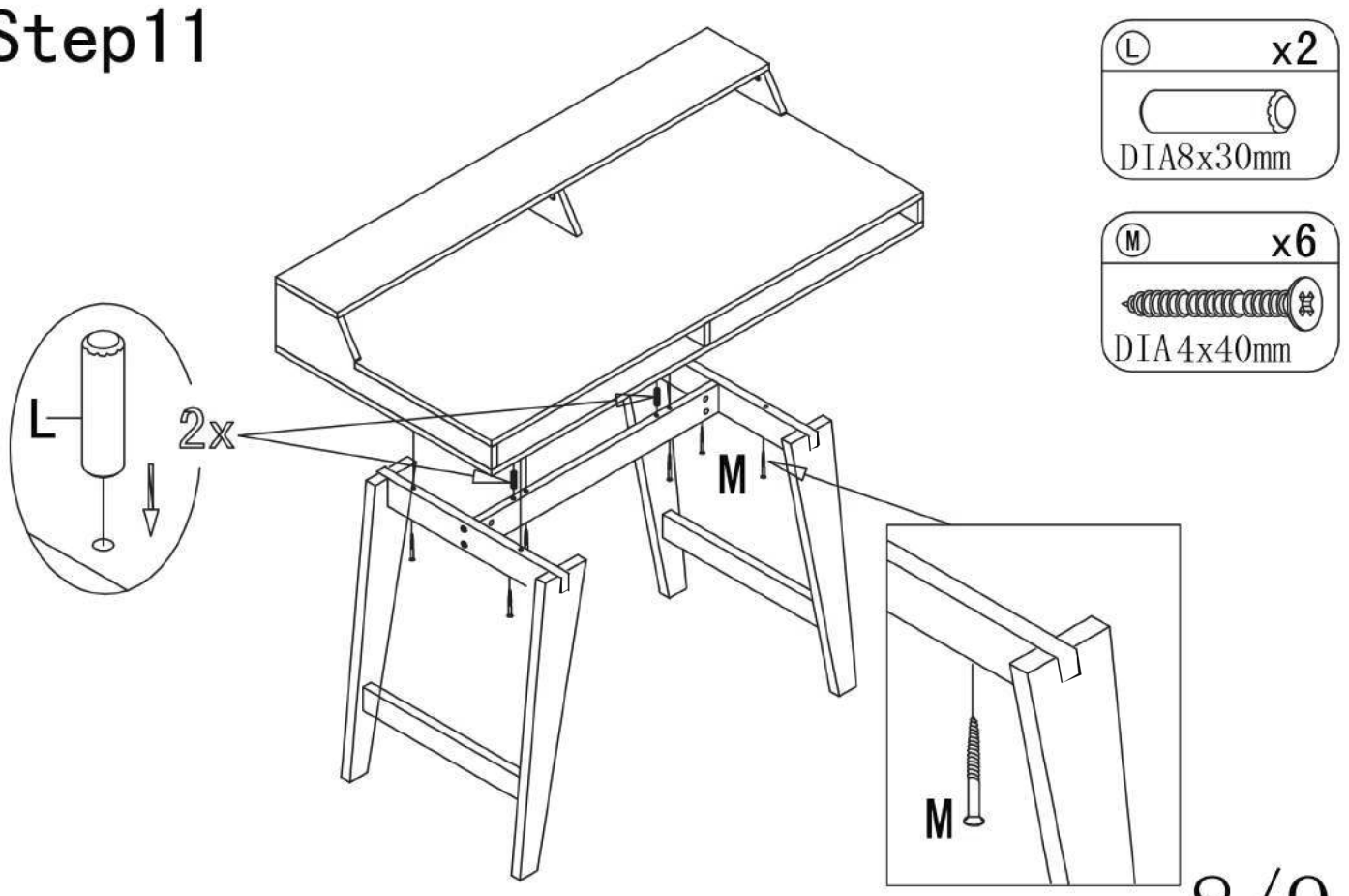

Step12

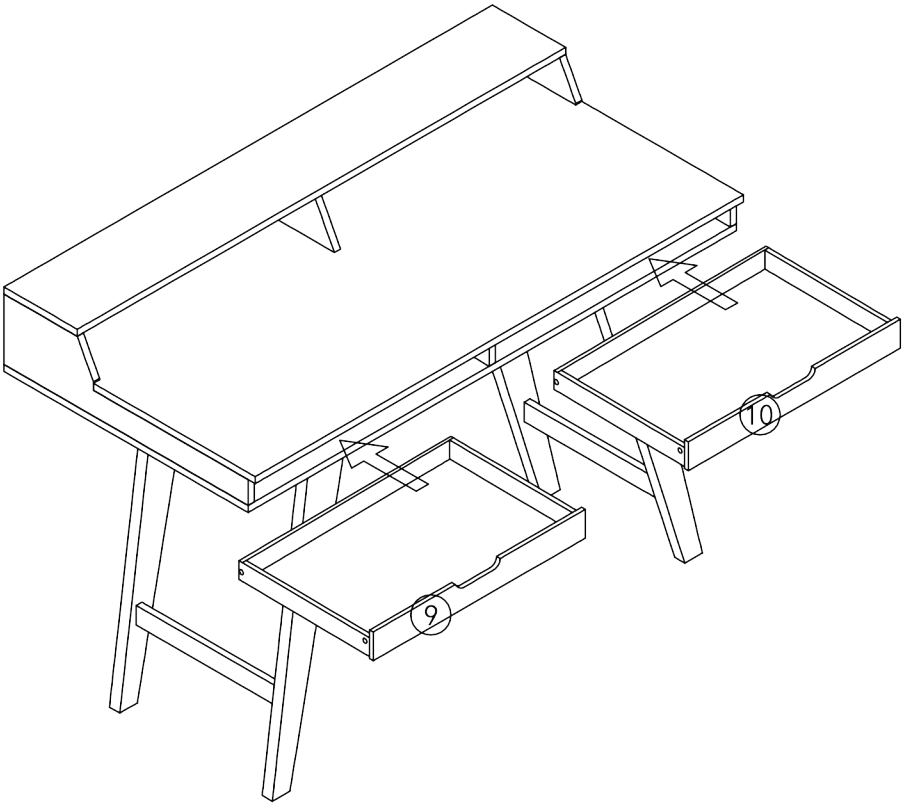
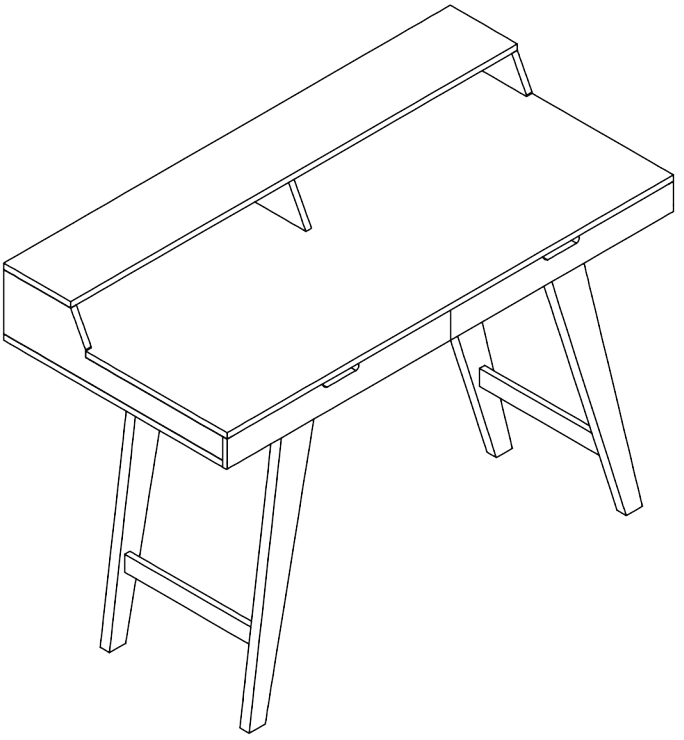
Step13