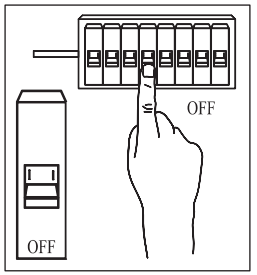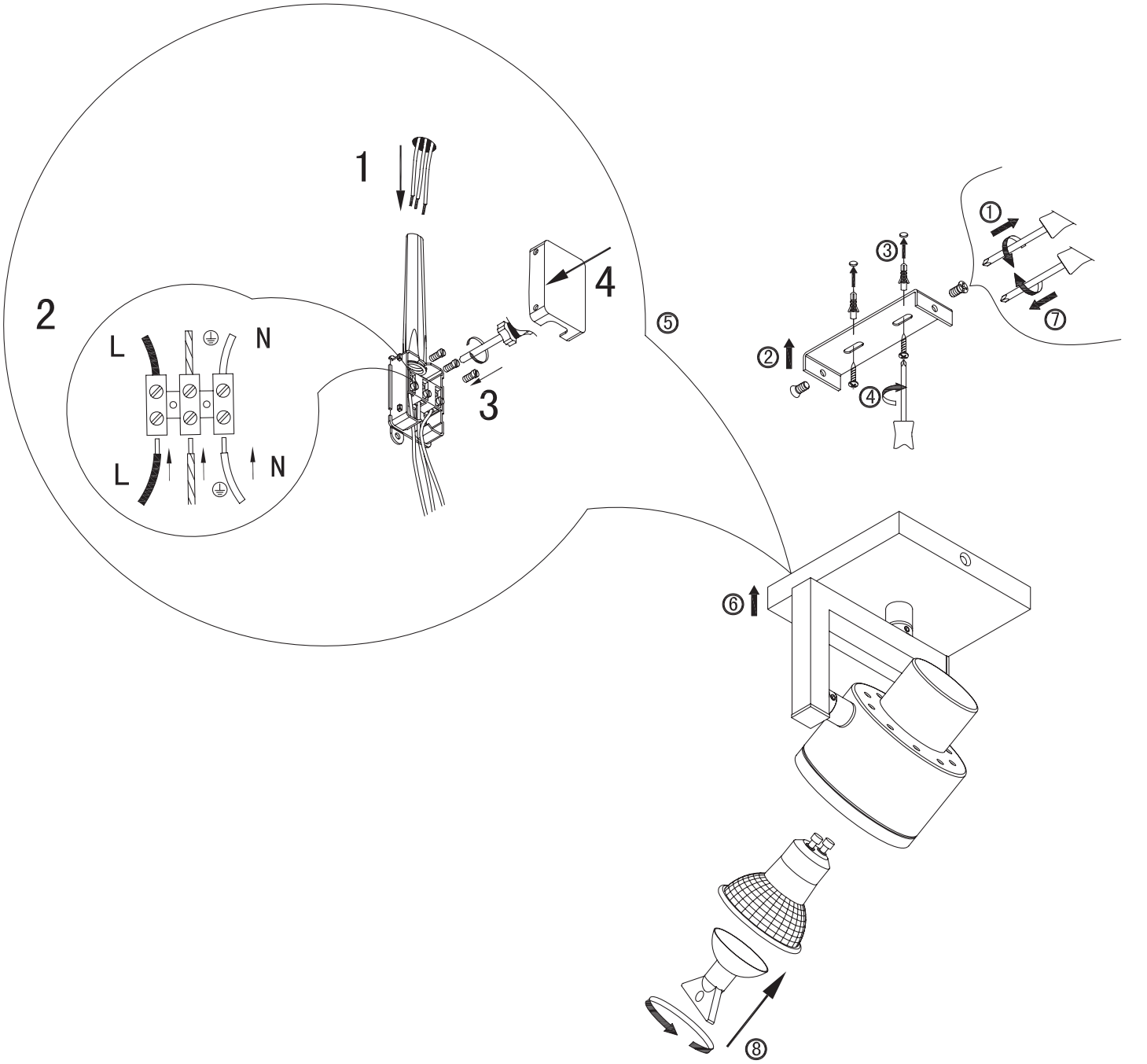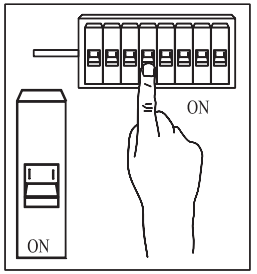71600083-01