ASSEMBLY INSTRUCTTONS

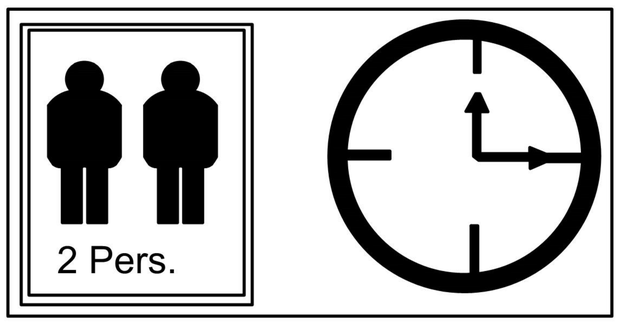

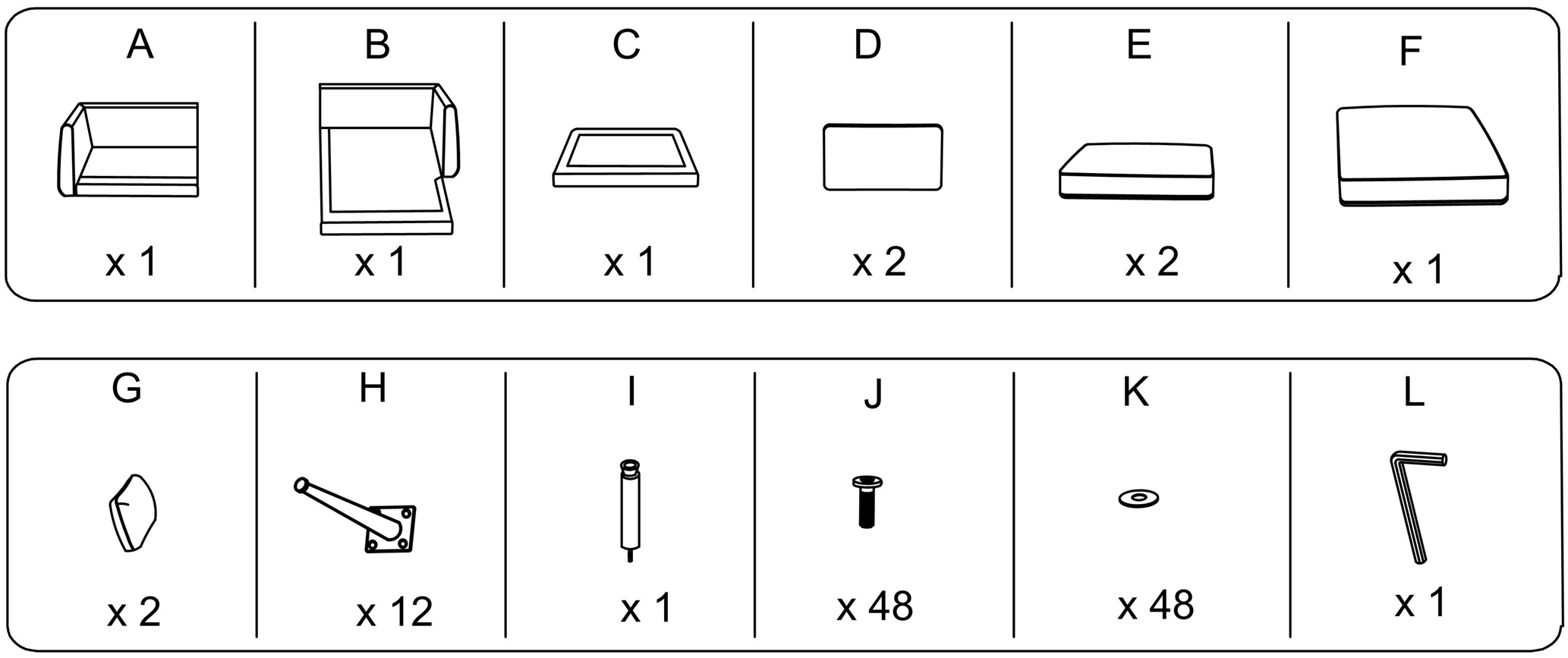

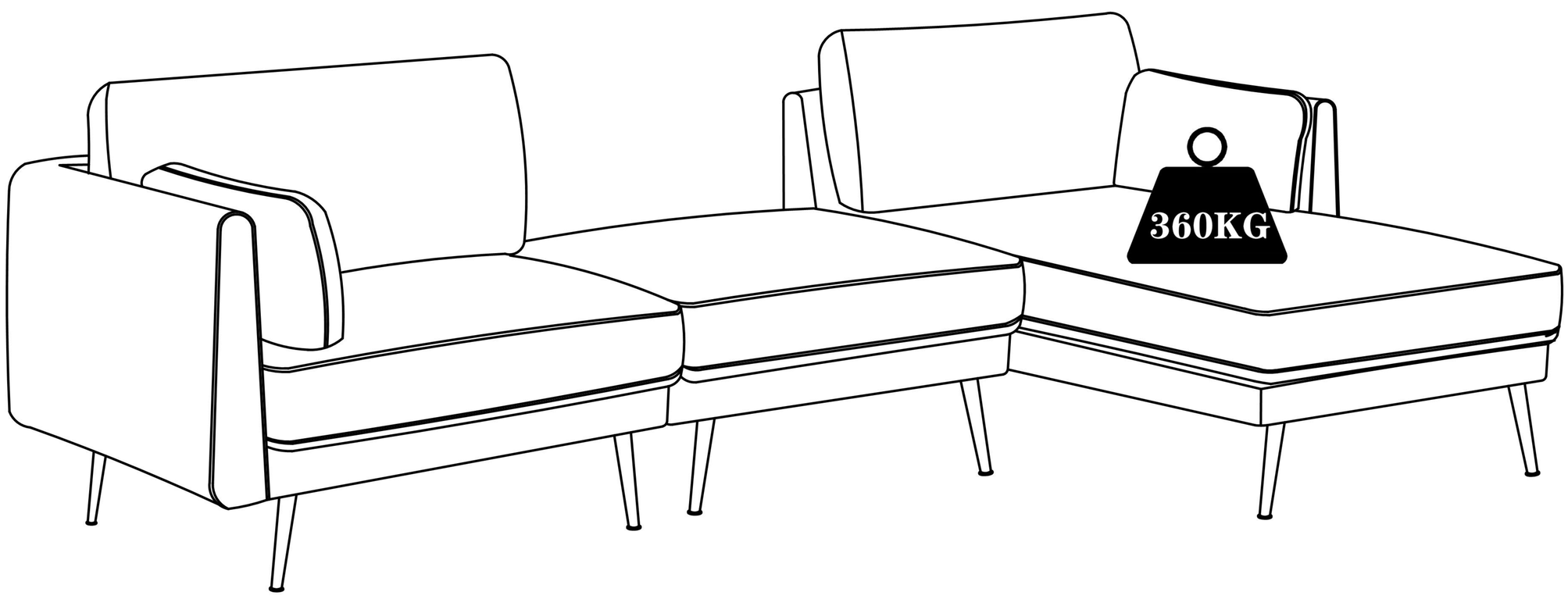

STEP 1

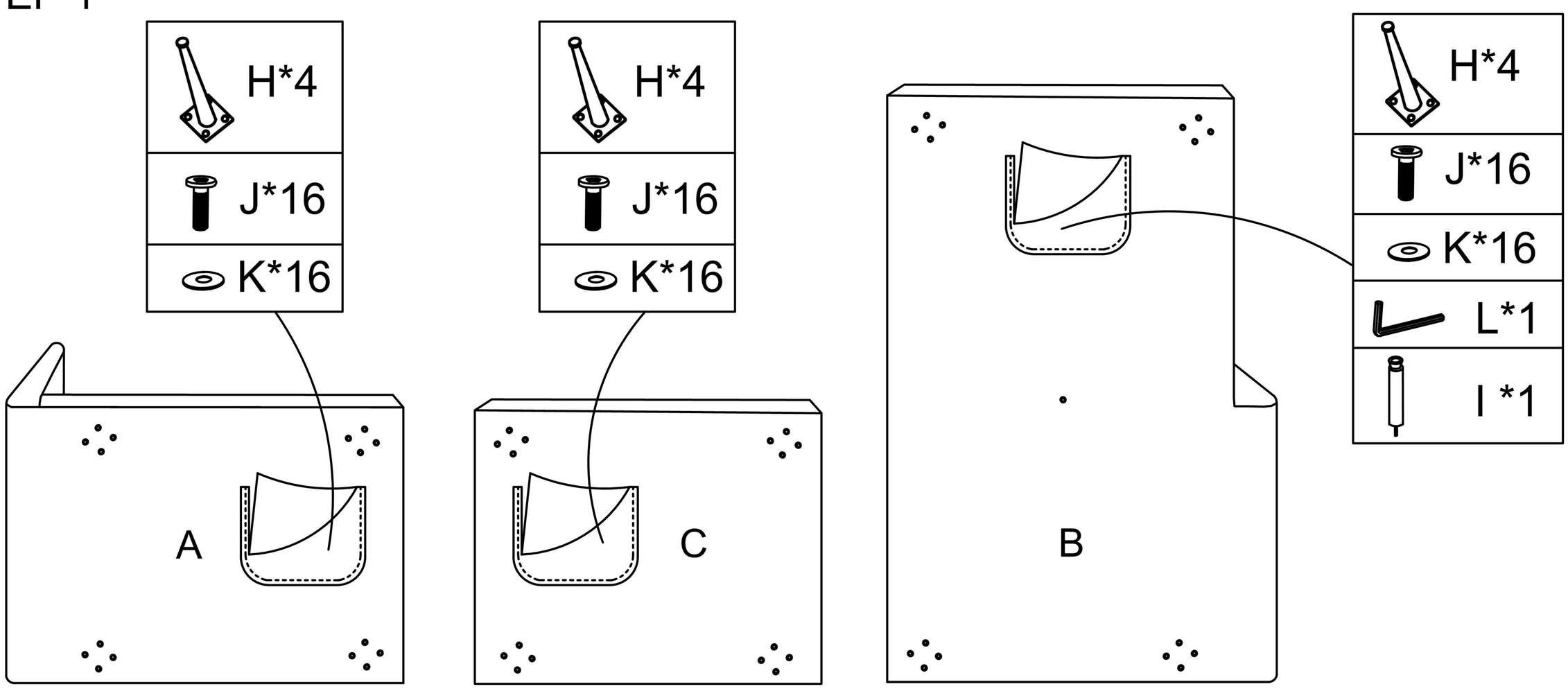

STEP 2

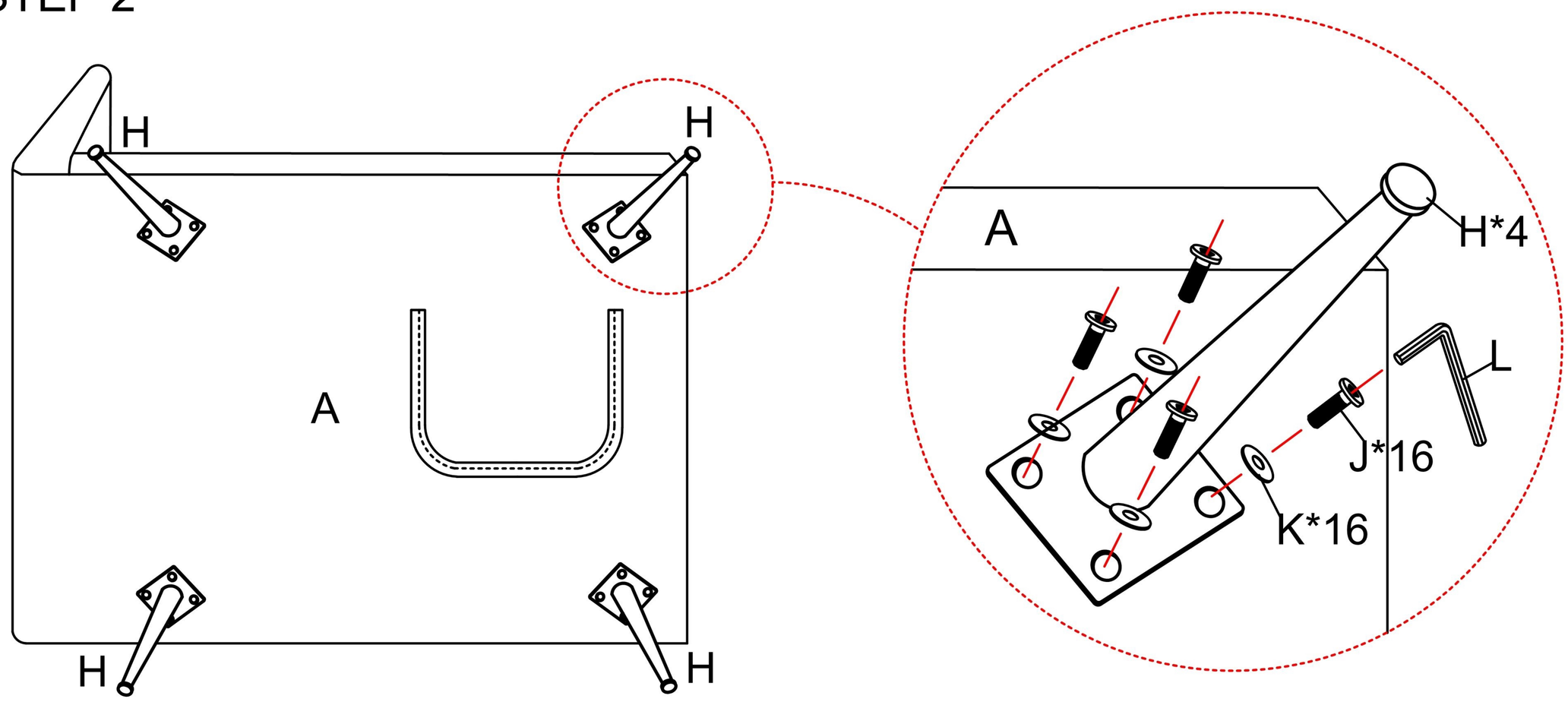

STEP 3

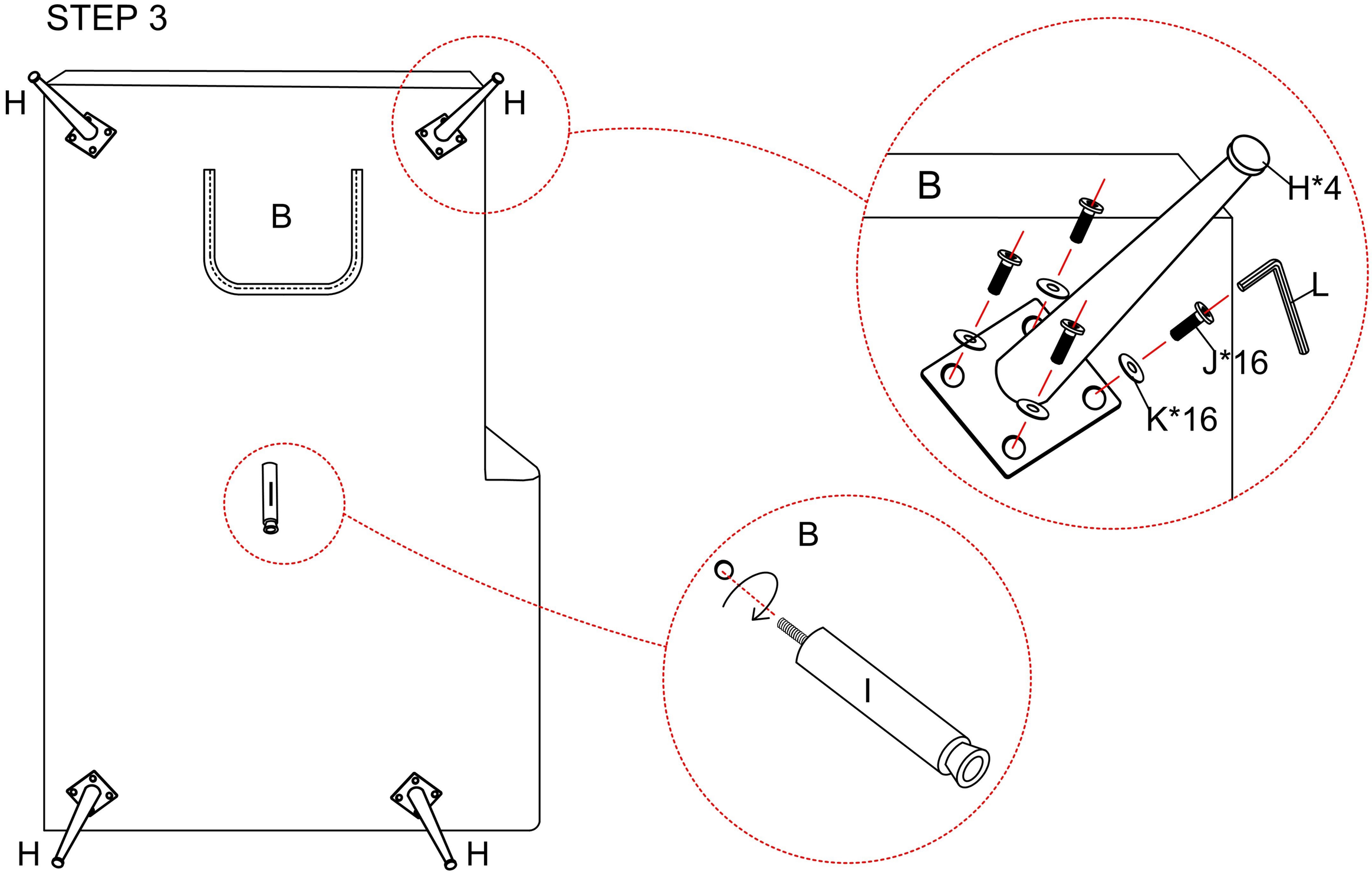

STEP 4

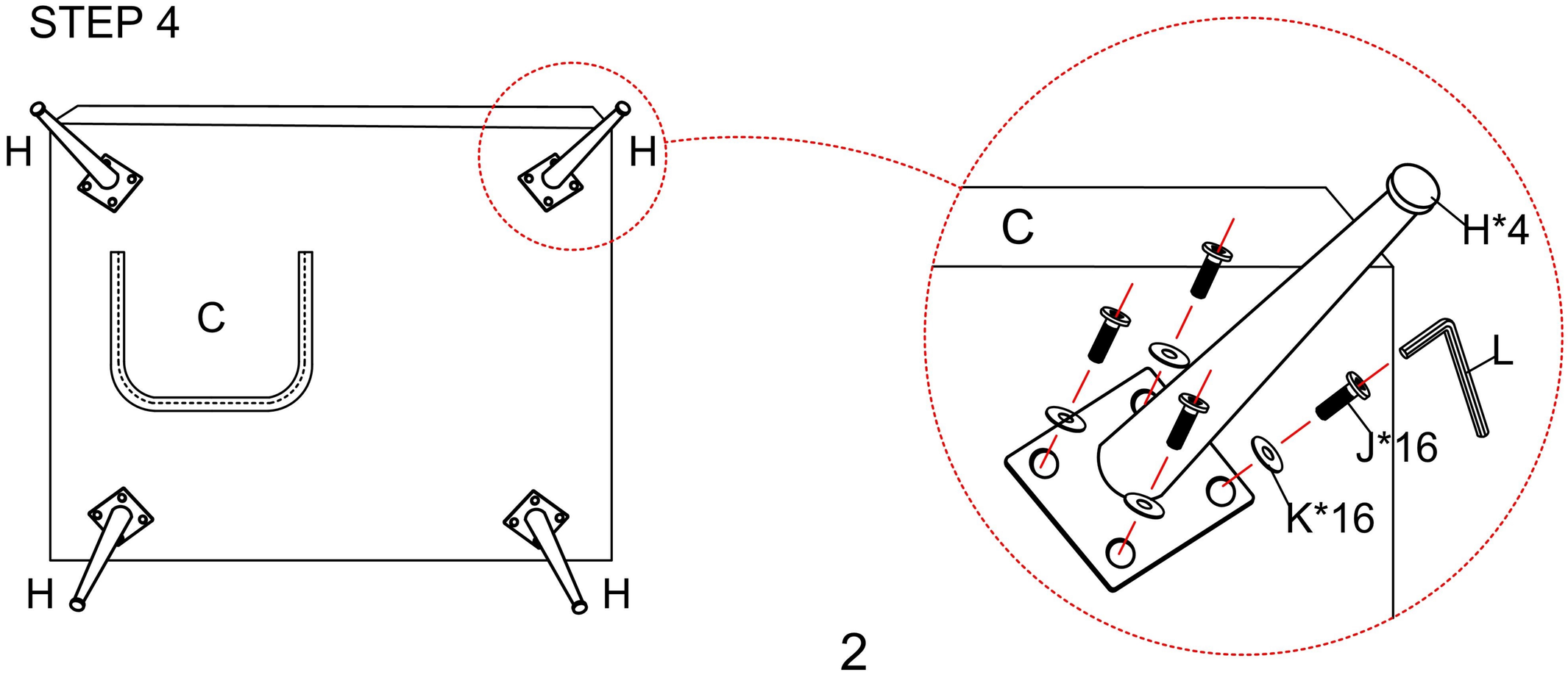

STEP 5

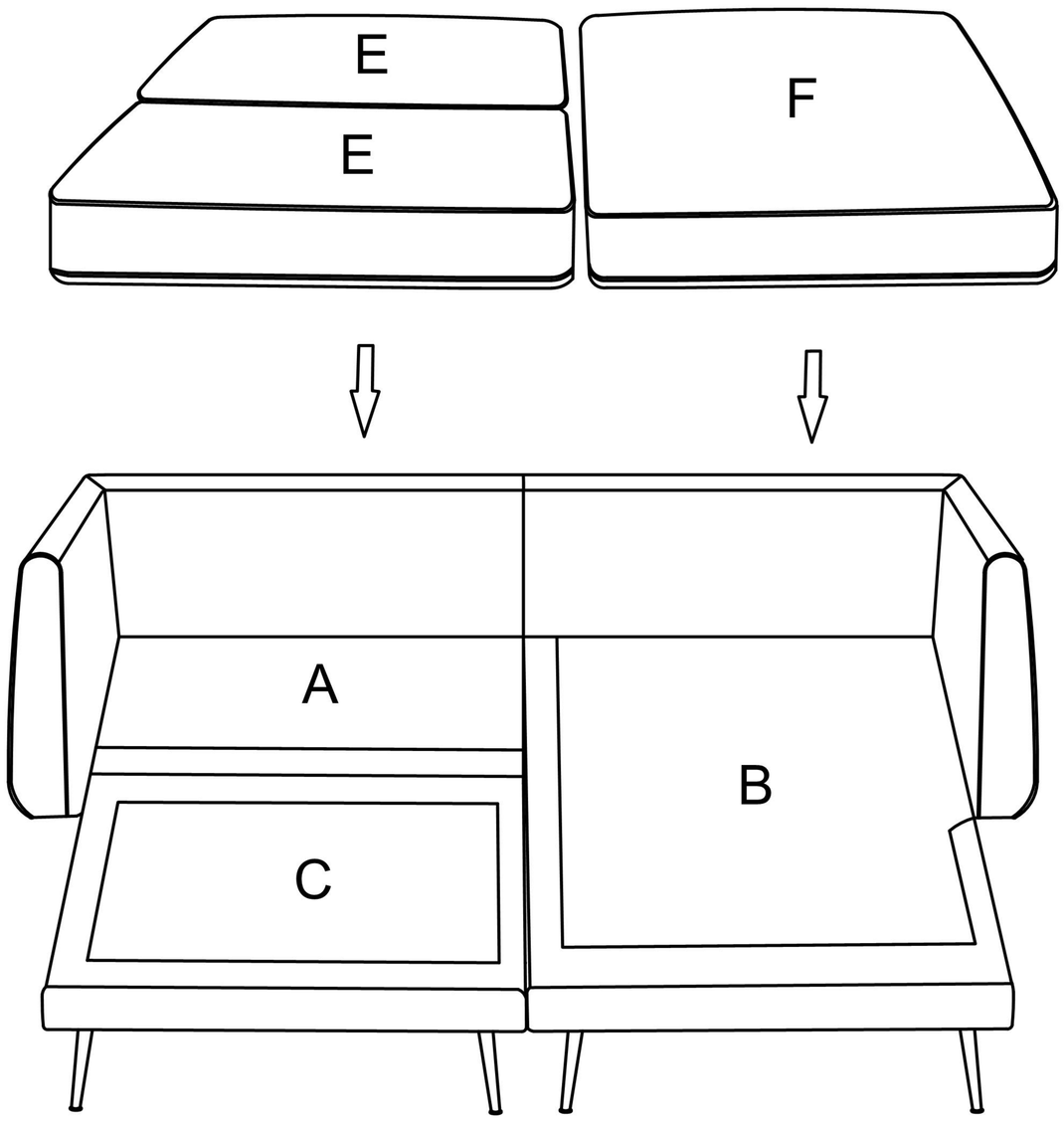

STEP 6

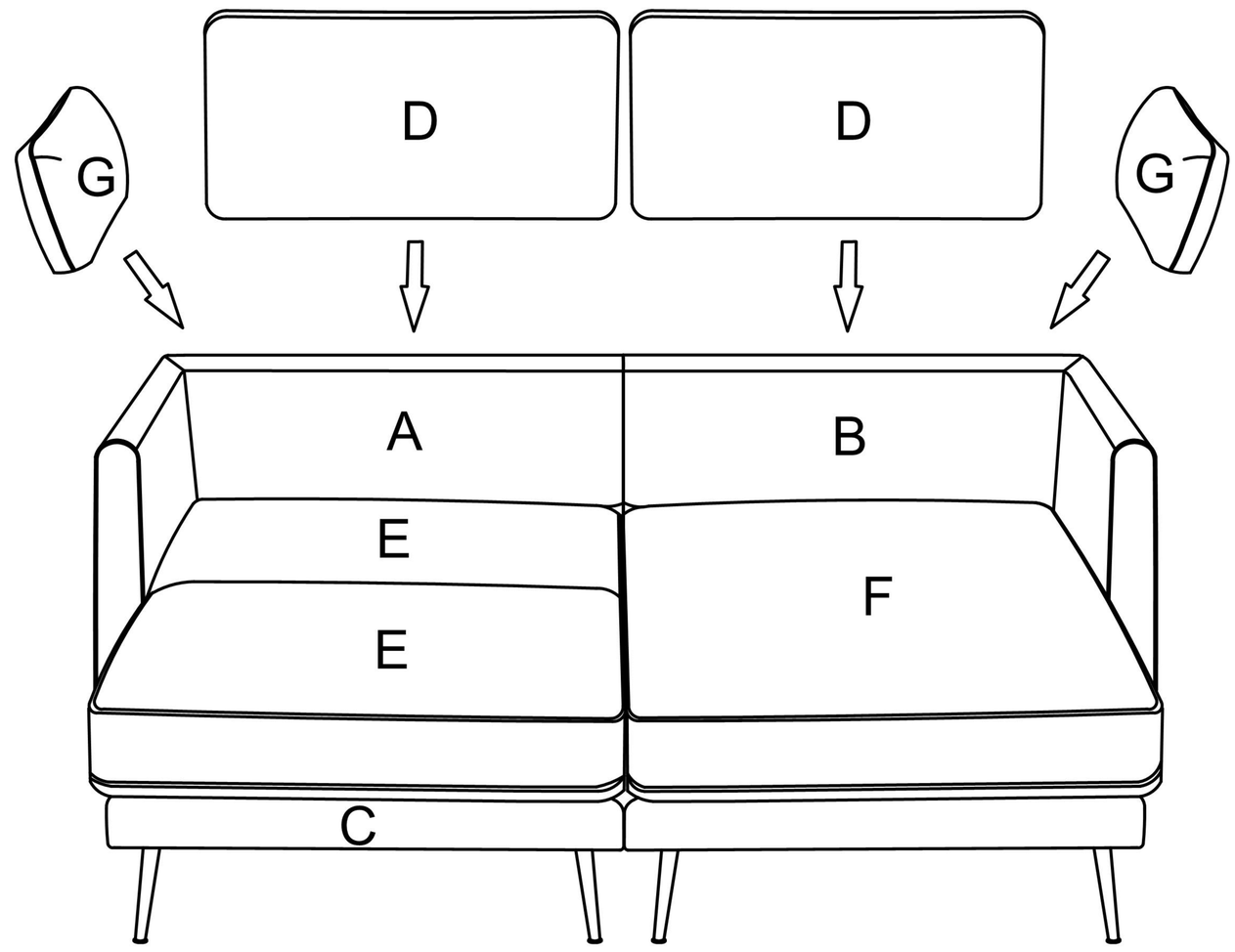
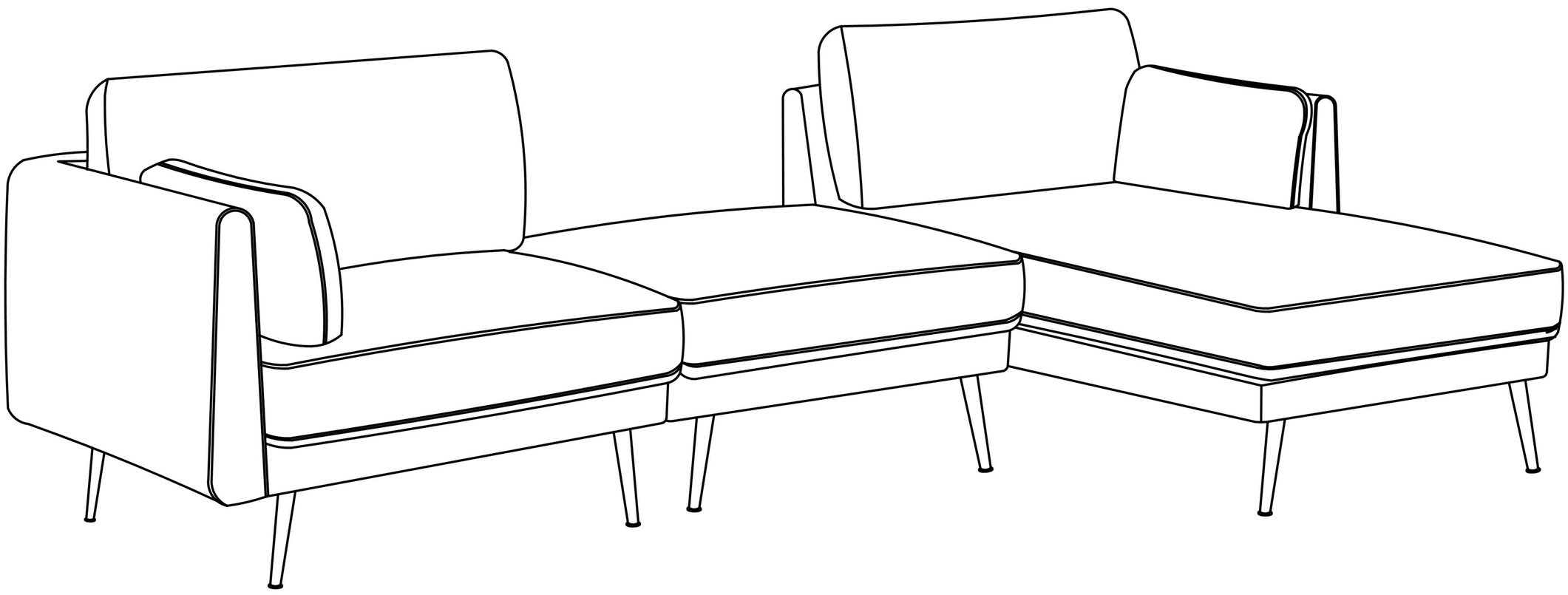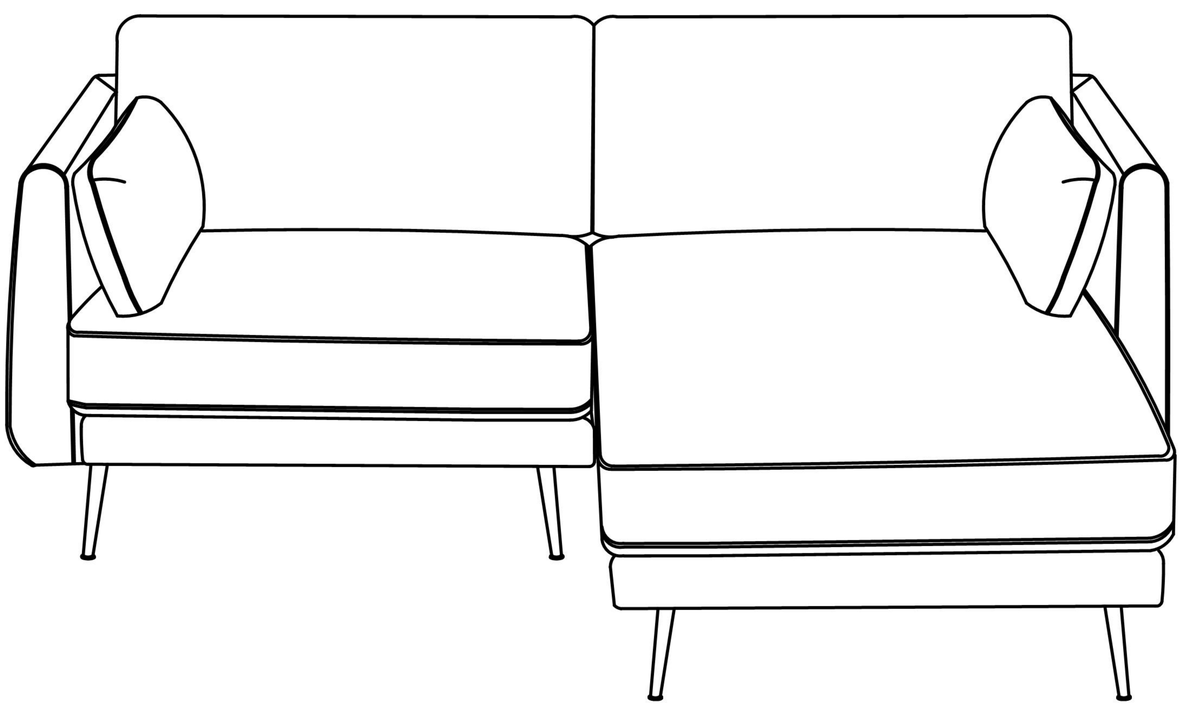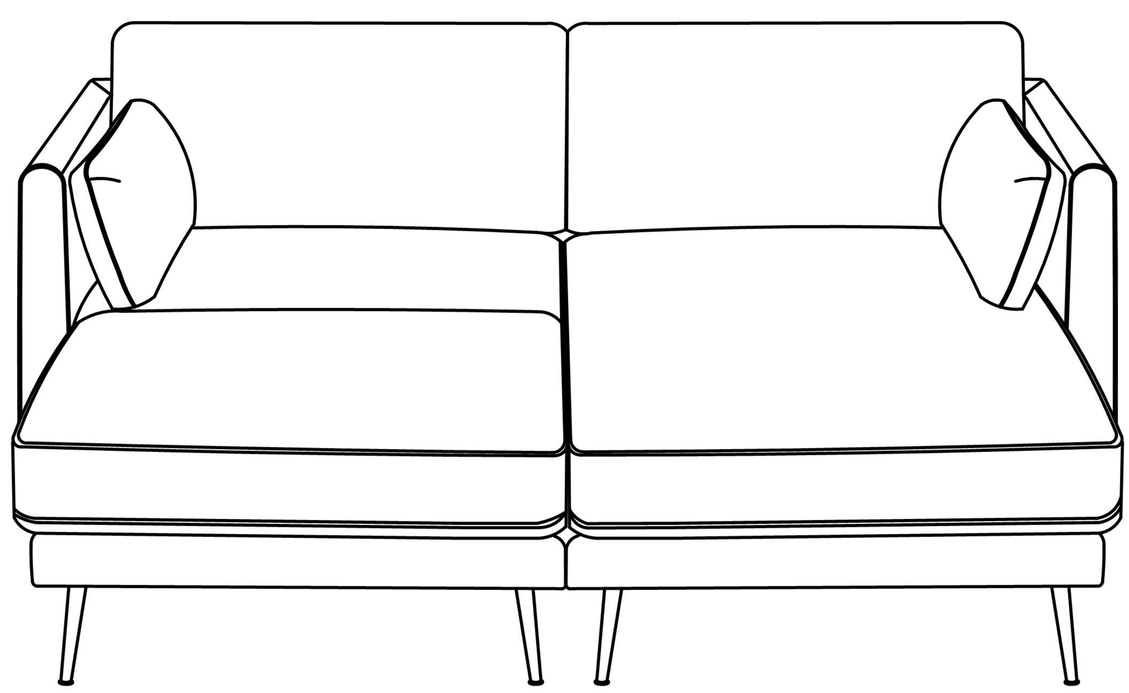
STEP 7