16340128-01
ZOJA

BDSK Handels GmbH & Co. KG
Mergentheimer Straße 59
DE-97084 Würzburg Germany

modern living

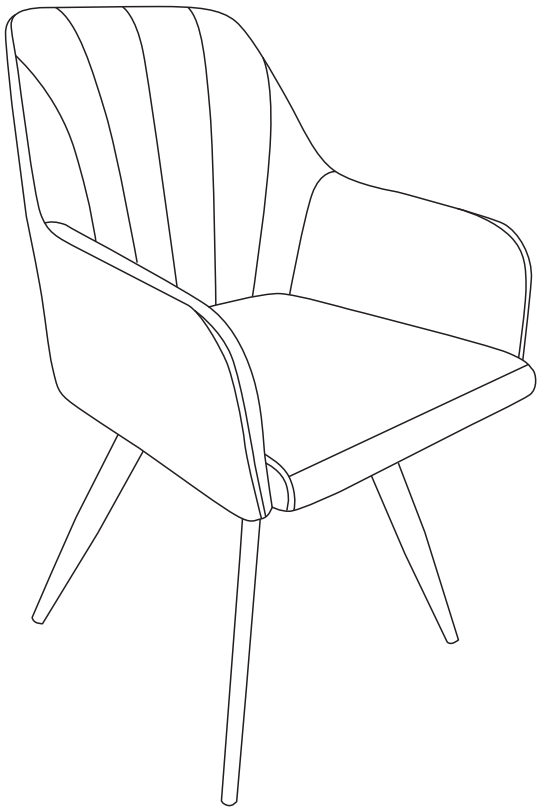











A x1	B X1	C X1	D X1	E X4
			 M6*35mm	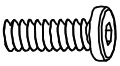 M6*40mm

F X1
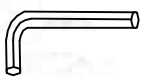



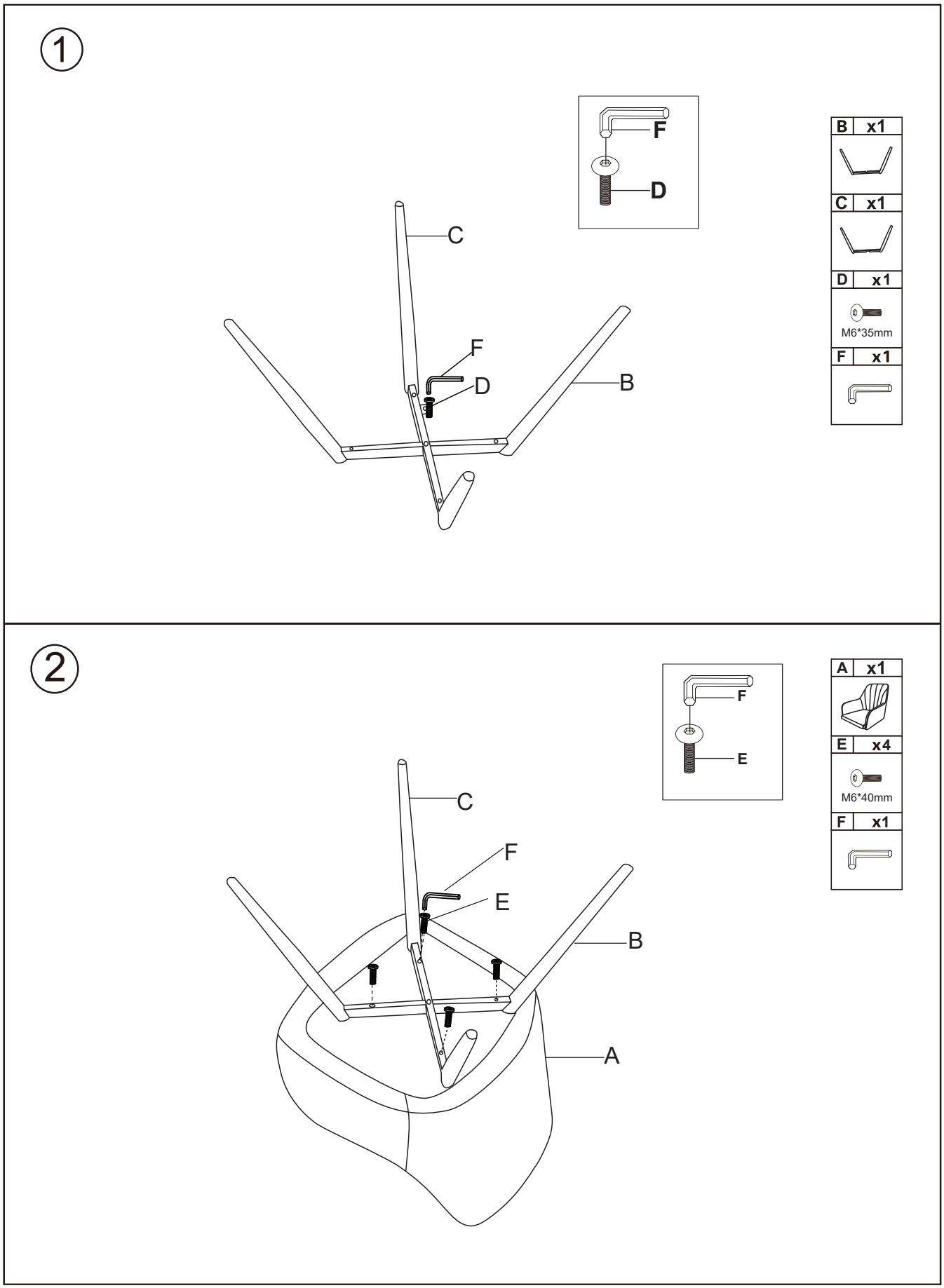
1
F
D
C
F
D
B
B x1
C x1
D x1
M6*35mm
F x1
2
F
E
C
F
E
B
A
A x1
E x4
M6*40mm
F x1


0 1 2 3 4 5 6 7 8 9 10 11 12 13 14 15