22160041/01

XXX LUTZKG
Roemerstrasse 39 AT-4600
Wels
Austria

BESSAGI

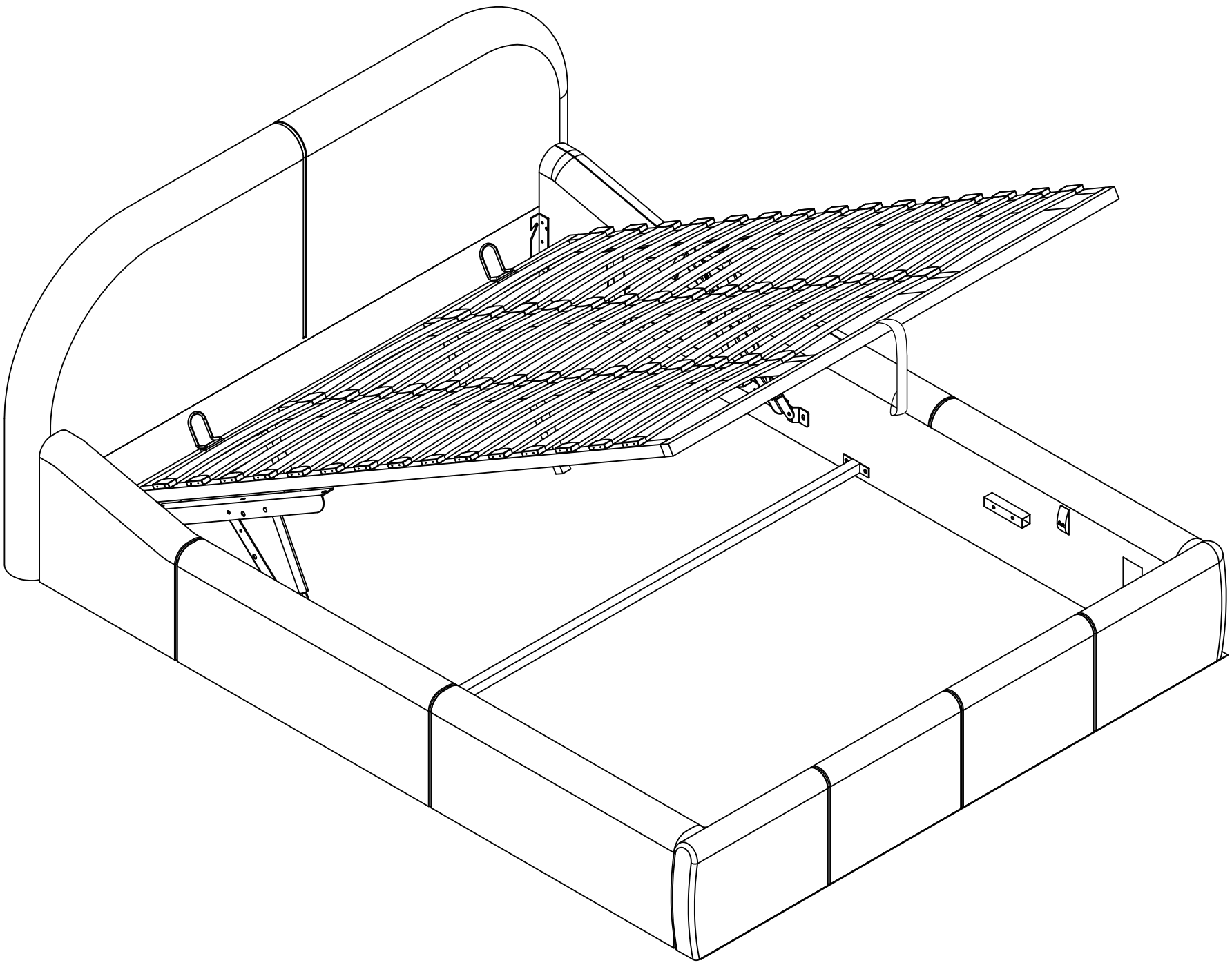



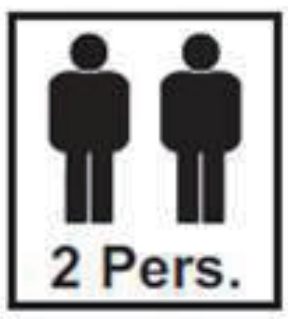

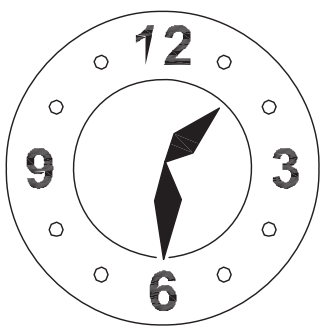

90min



① 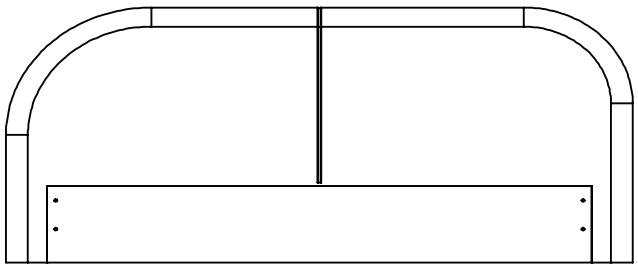
1PC

② 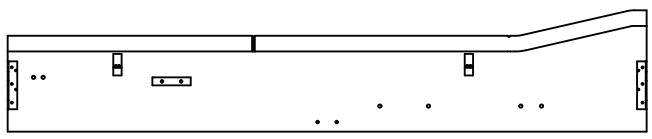
1PC

③ 
1PC

④ 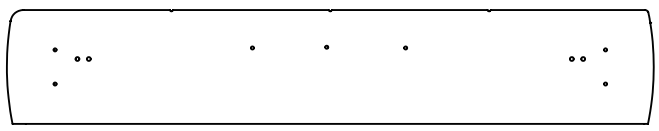
1PC

⑤ 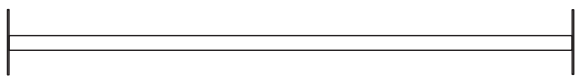
1PC

⑥ 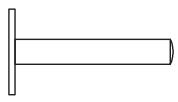
4PCS

⑦ 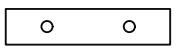
2PCS

⑧ 
45PCS

⑨ 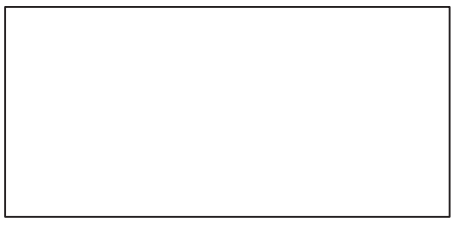
1PC

⑩
2PCS

⑪
2PCS

⑫ 
1PC

⑬ 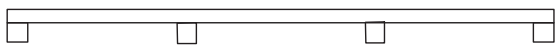
1PC

⑭ 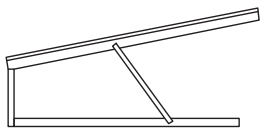
1PC

⑮ 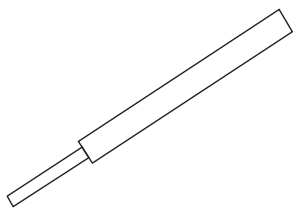
2PCS

⑯ 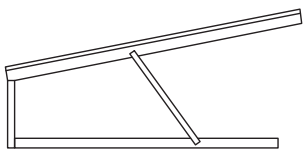
1PC

⑰ 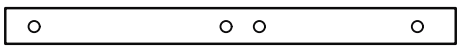
1PC



A 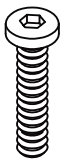 M8x25mm x24pcs	B 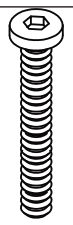 M8x45mm x7pcs	C  M6x15mm x4pcs
D  M6x20mm x30pcs	E 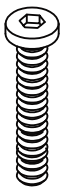 M6x35mm x1pc	F 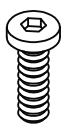 M8x16mm x8pcs
G  ∅ 18x1.0 x49pcs	H  x2pcs	I  14#M8 x1pc
J x30pcs	K x30pcs	L  M8 x4pcs
M 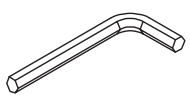 4mm x1pc	N 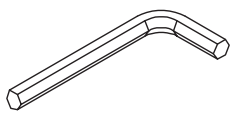 5mm x1pc	O 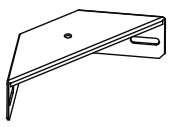 x2pcs
P  x1pc	Q  M8x40mm x4pcs	

1

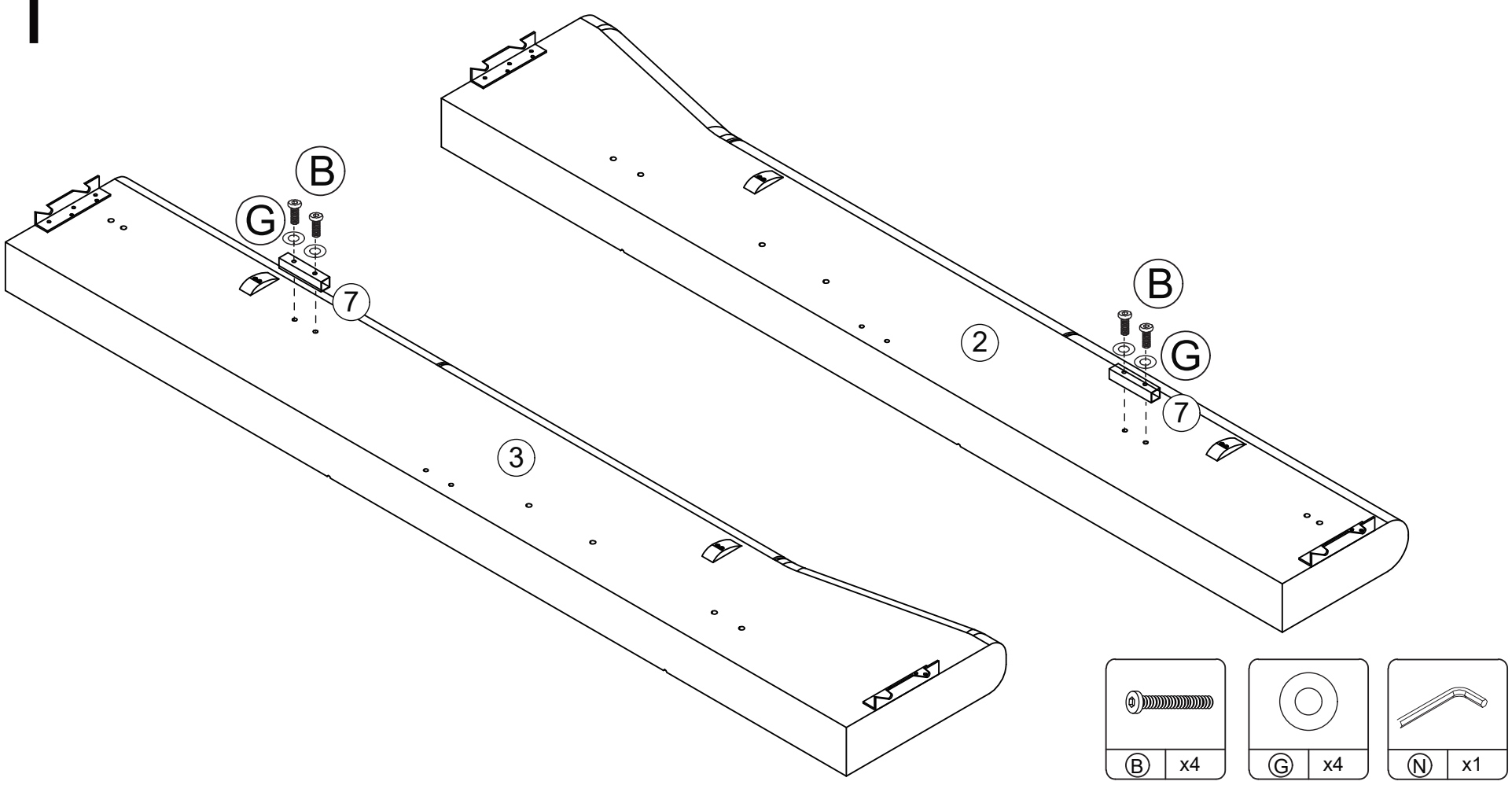



2

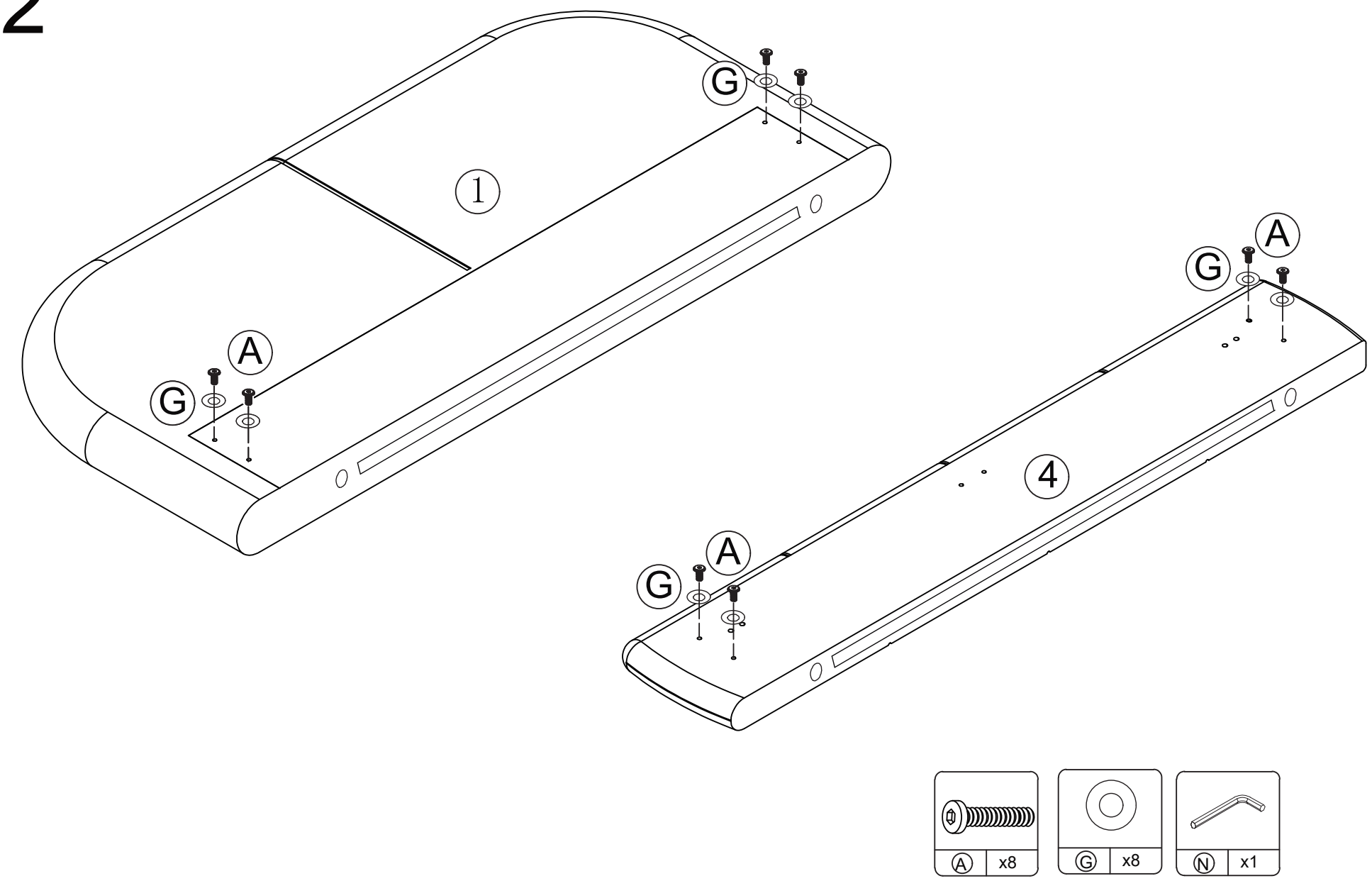
G
1
A
G
A
G
4
A
G

A x8
G x8
N x1

3

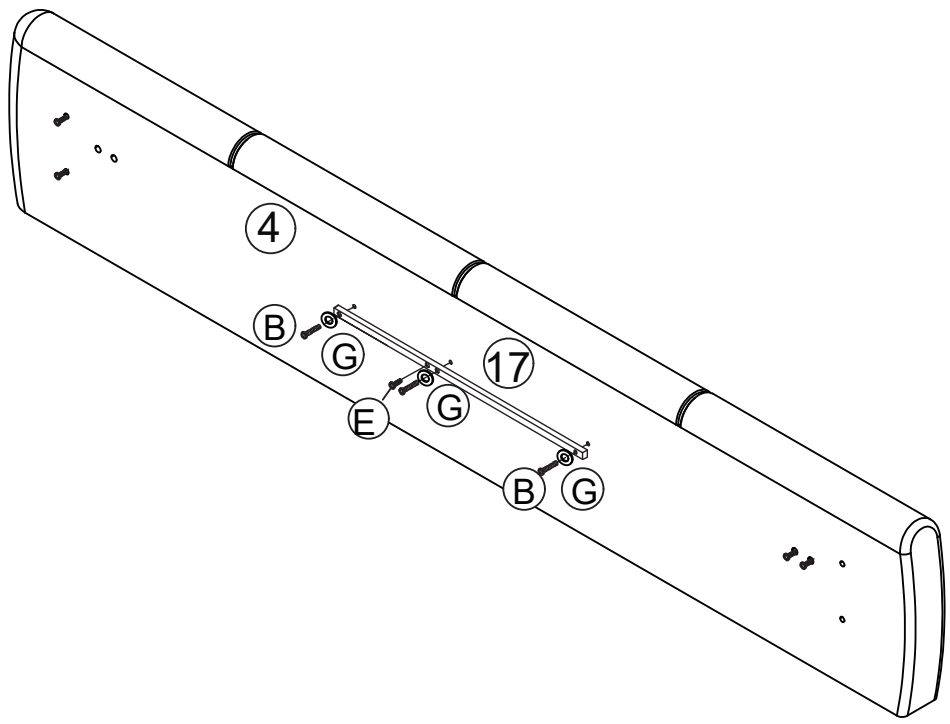
4
B
G
17
E
G
B
G

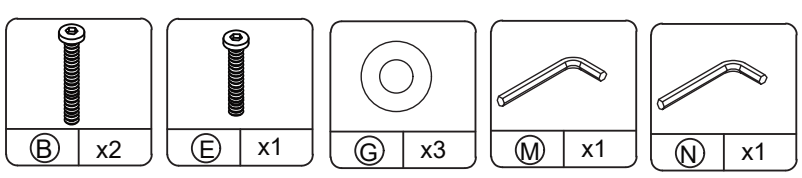
B x2
E x1
G x3
M x1
N x1


0 cm 1 2 3 4 5 6 7 8 9 10 11 12 13 14 15

4

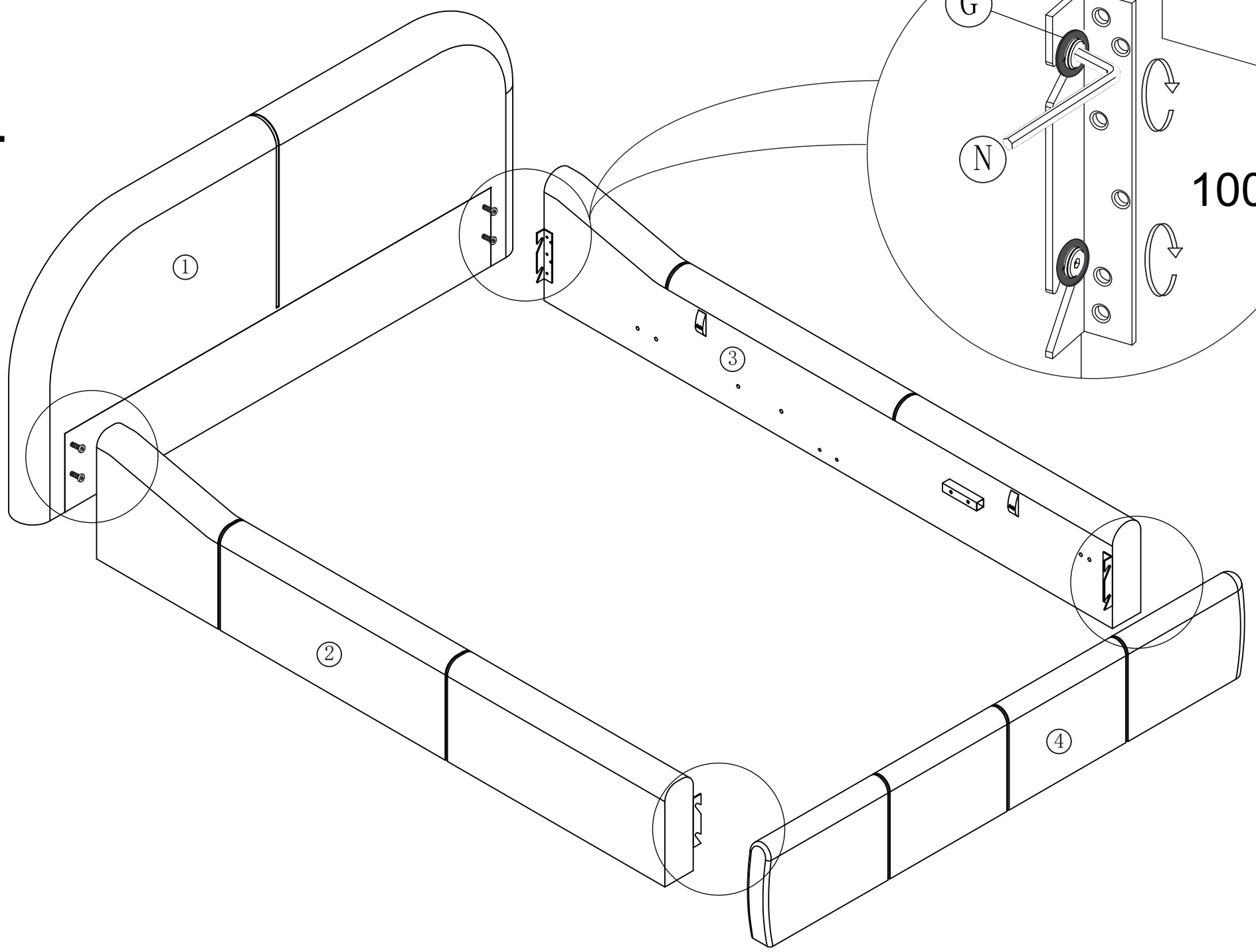

5

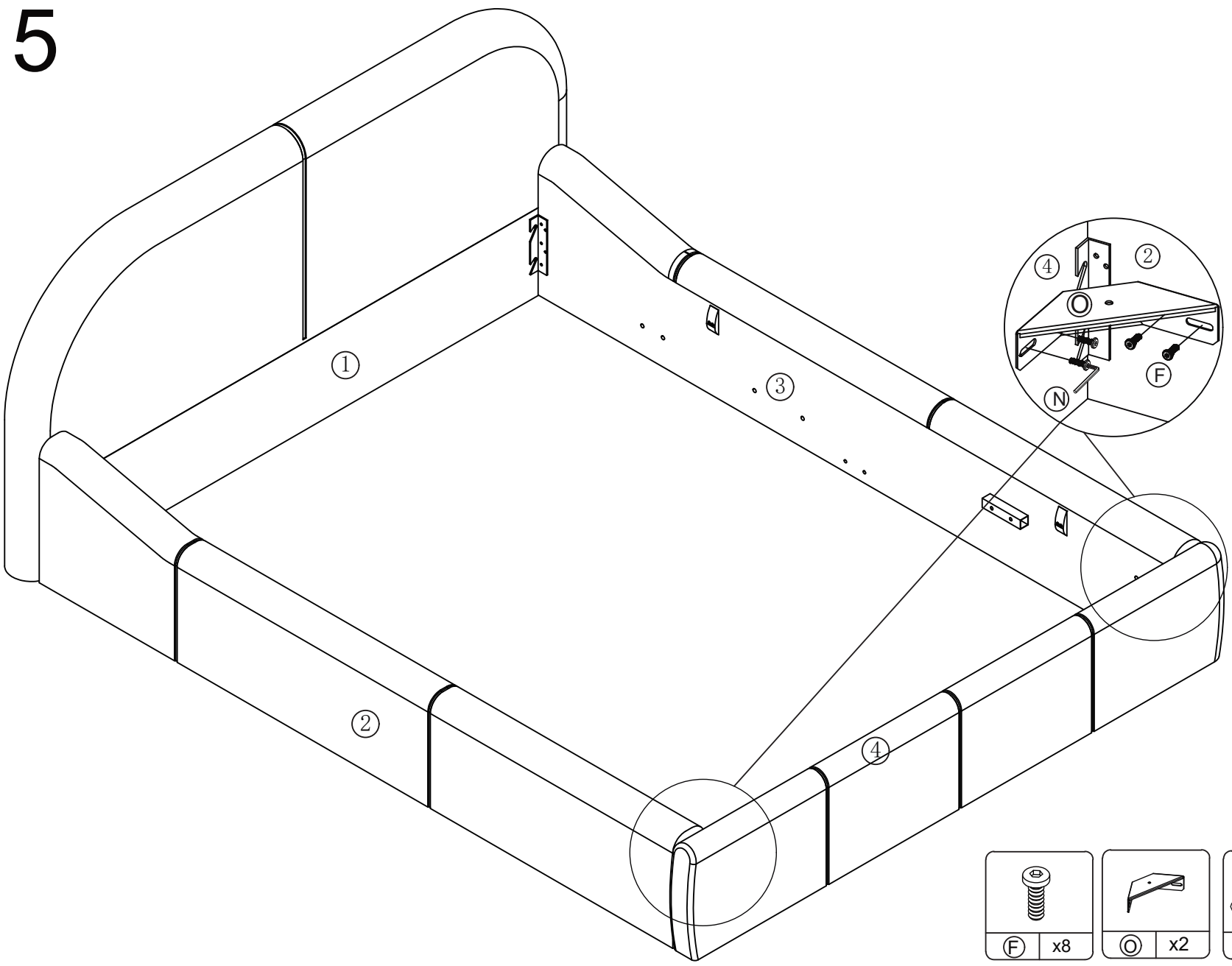



8

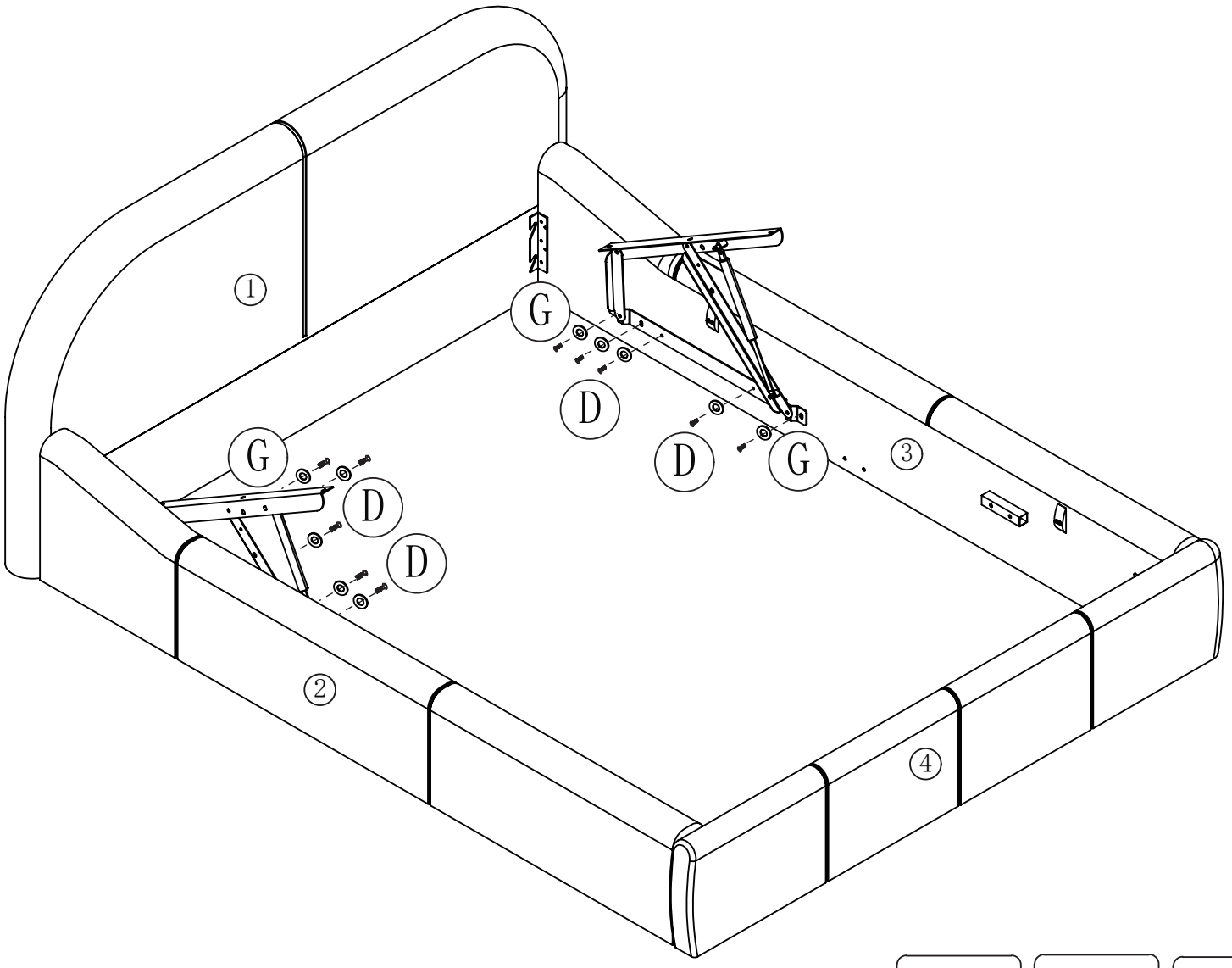
①
G
D
D
G
D
G
③
②
④

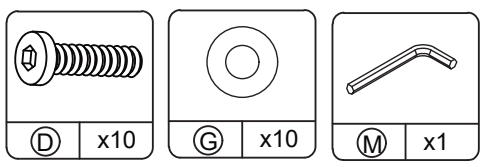
Ⓓ x10
Ⓖ x10
Ⓜ x1

9

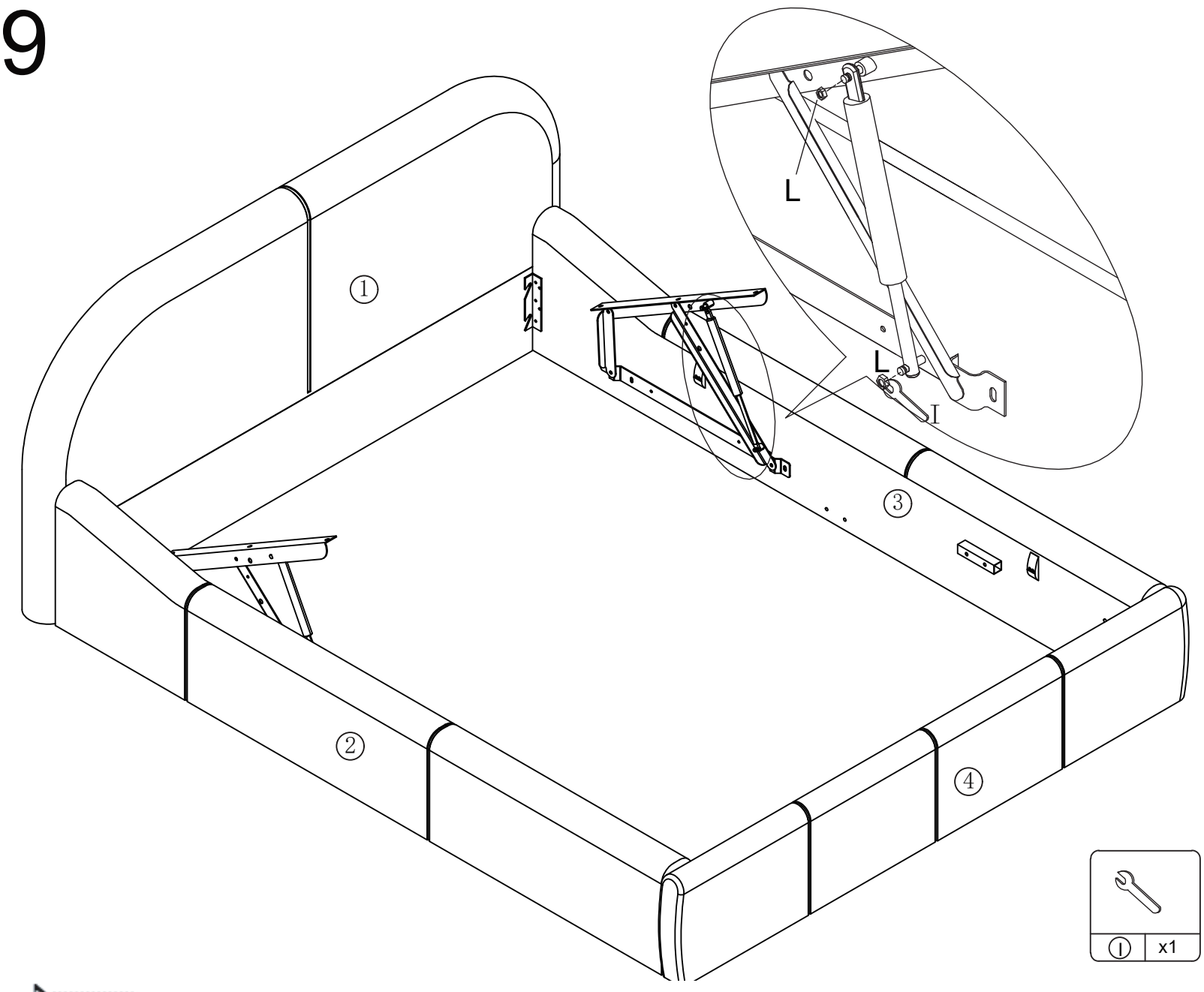
①
L
L
I
③
②
④

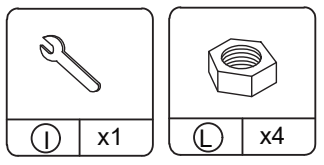
Ⓘ x1
Ⓛ x4


0 cm 1 2 3 4 5 6 7 8 9 10 11 12 13 14 15

10

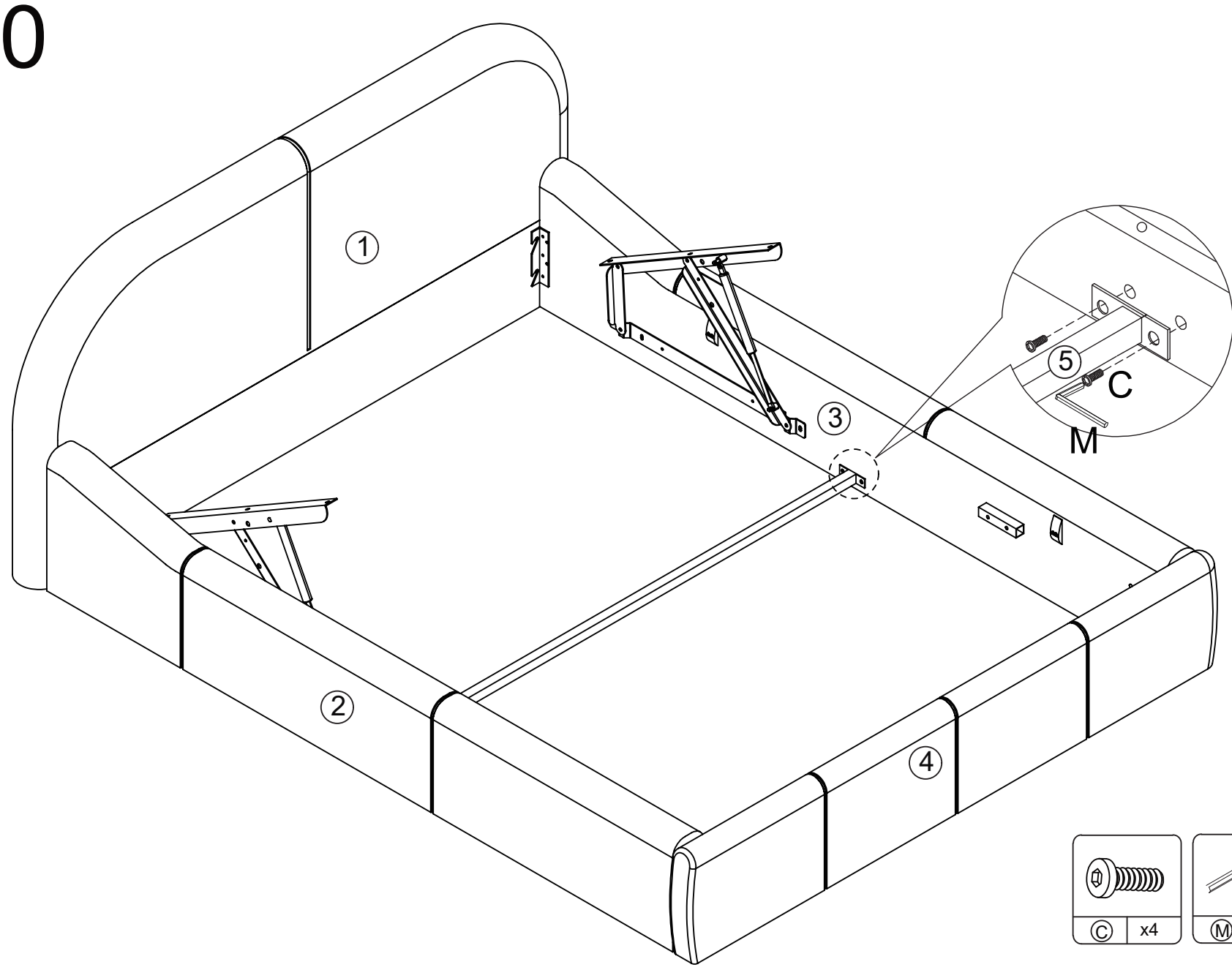

11

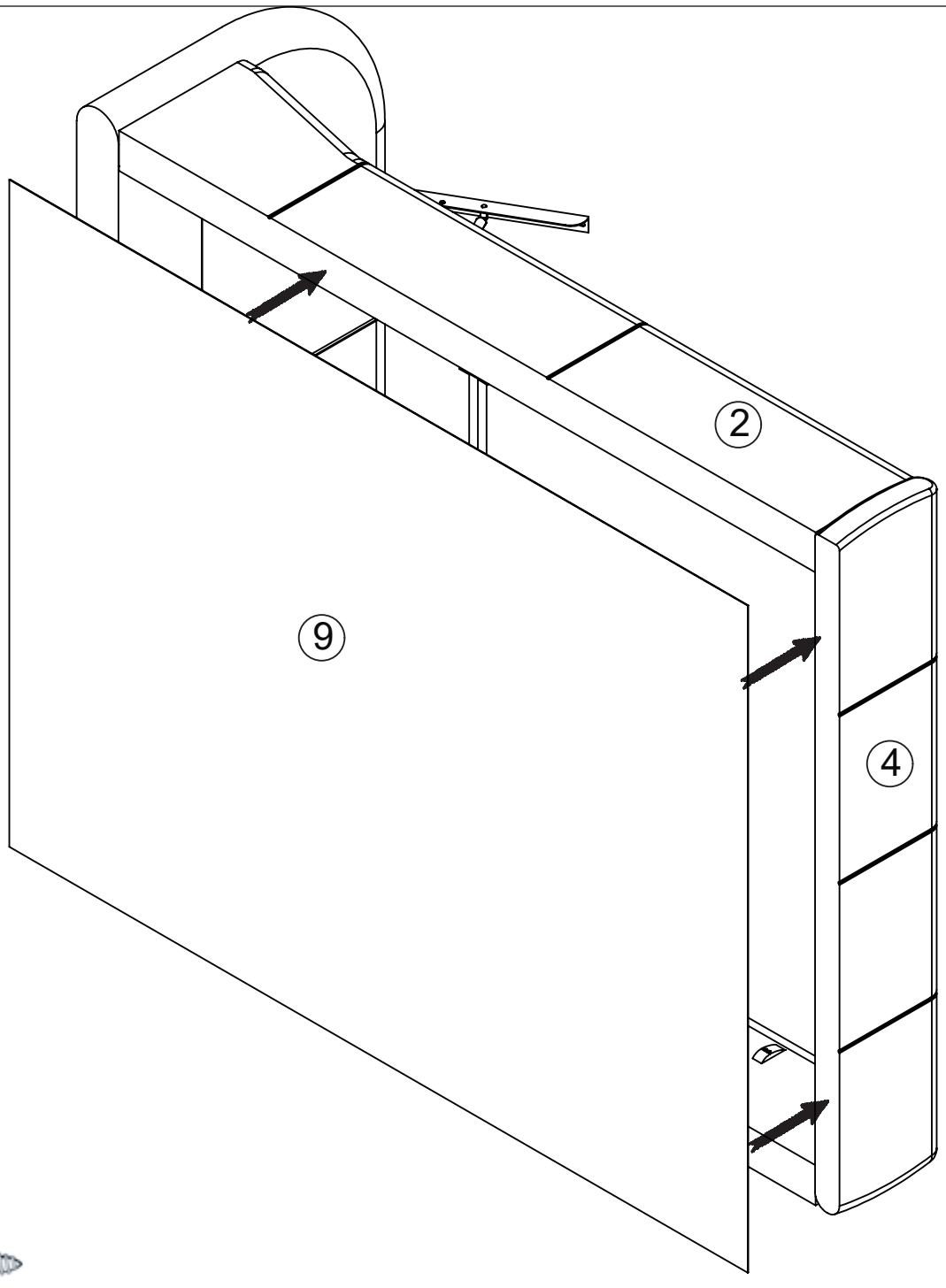



12

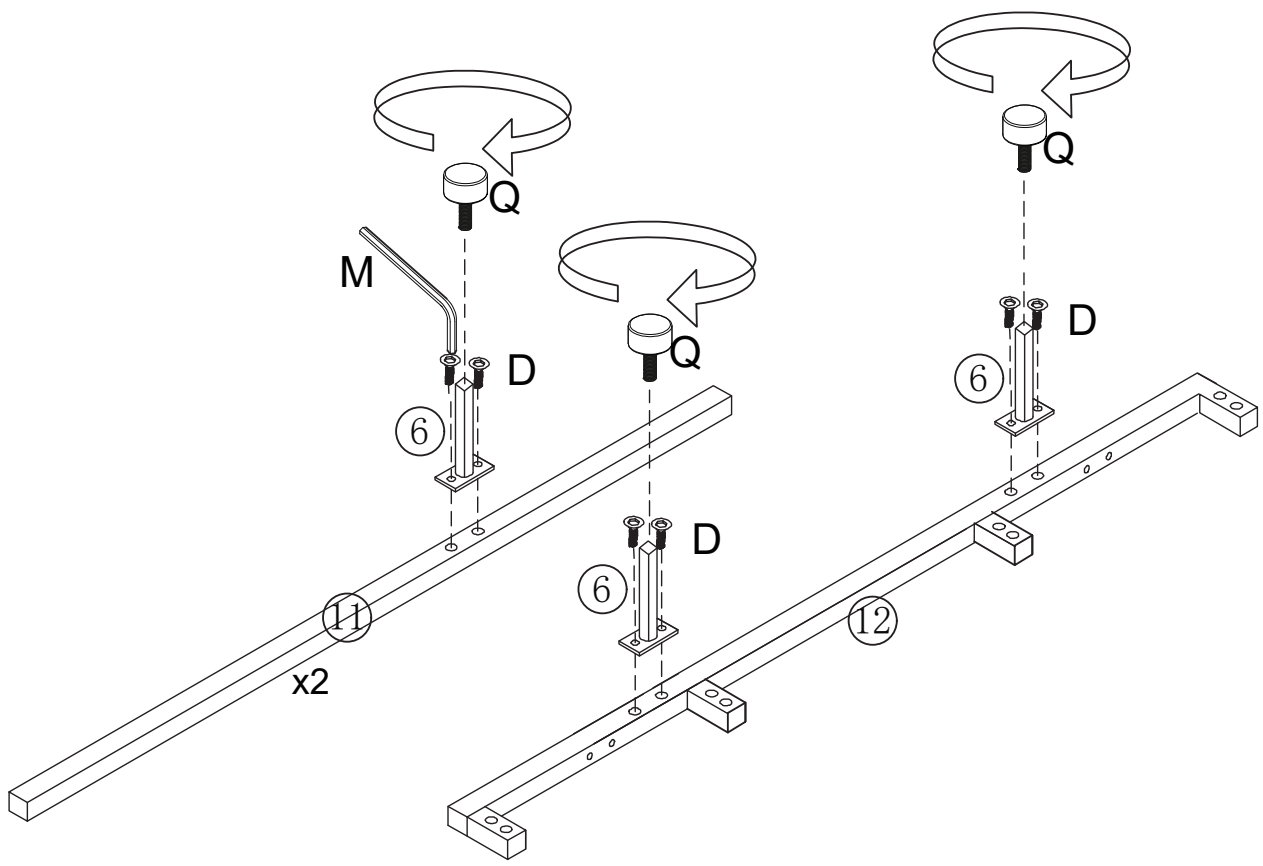
Q
M
D
6
11
x2
Q
D
6
Q
D
6
12

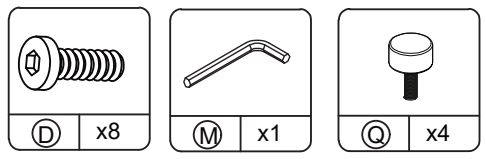
Ⓓ x8
Ⓜ x1
Ⓠ x4

13

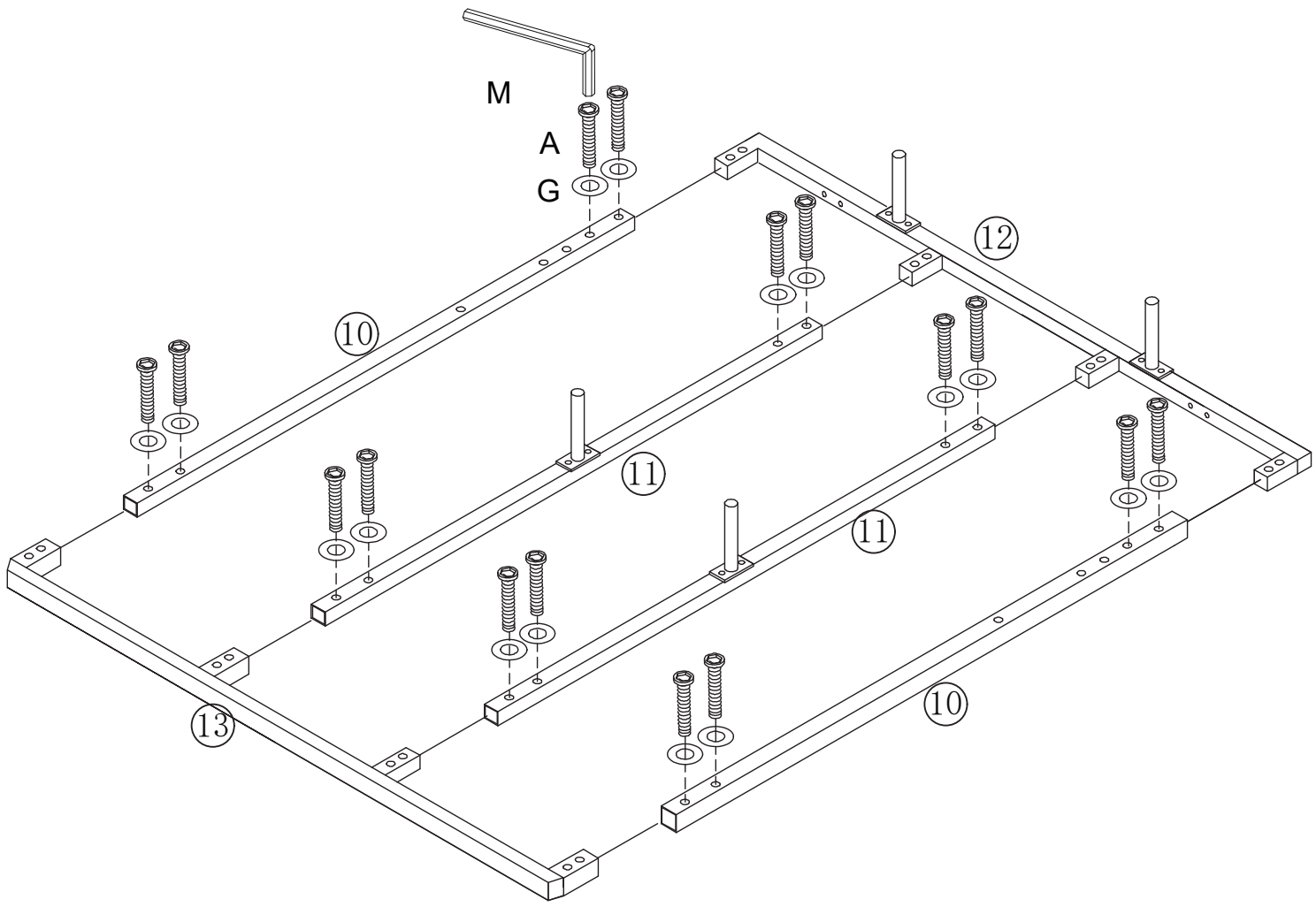
M
A
G
12
10
11
11
13
10

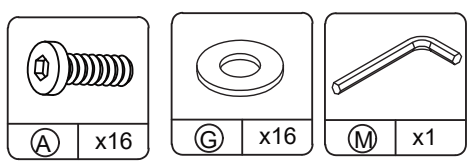
Ⓐ x16
Ⓖ x16
Ⓜ x1


0 cm 1 2 3 4 5 6 7 8 9 10 11 12 13 14 15

12

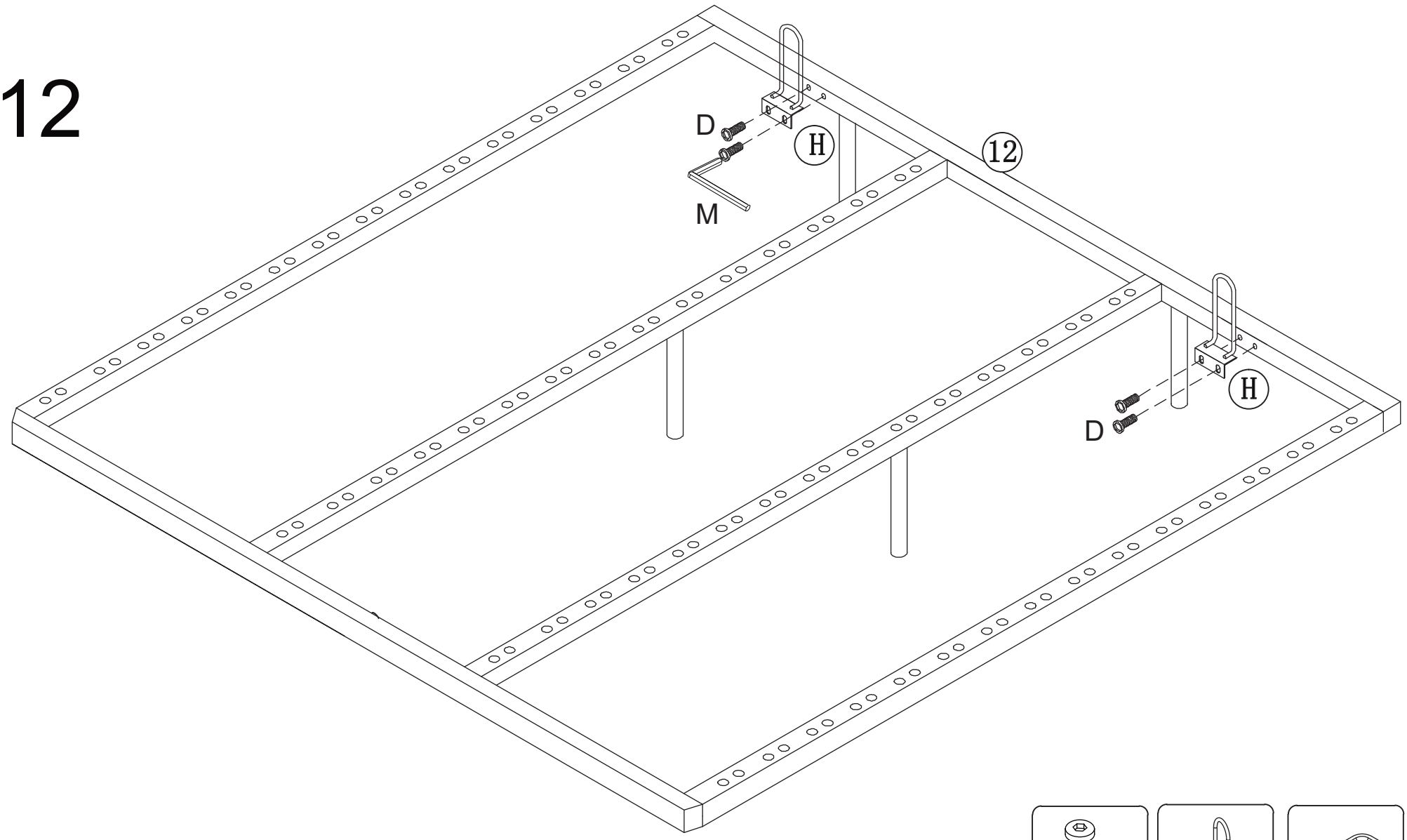

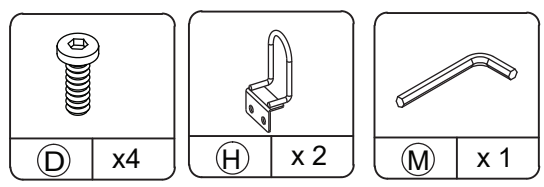

13

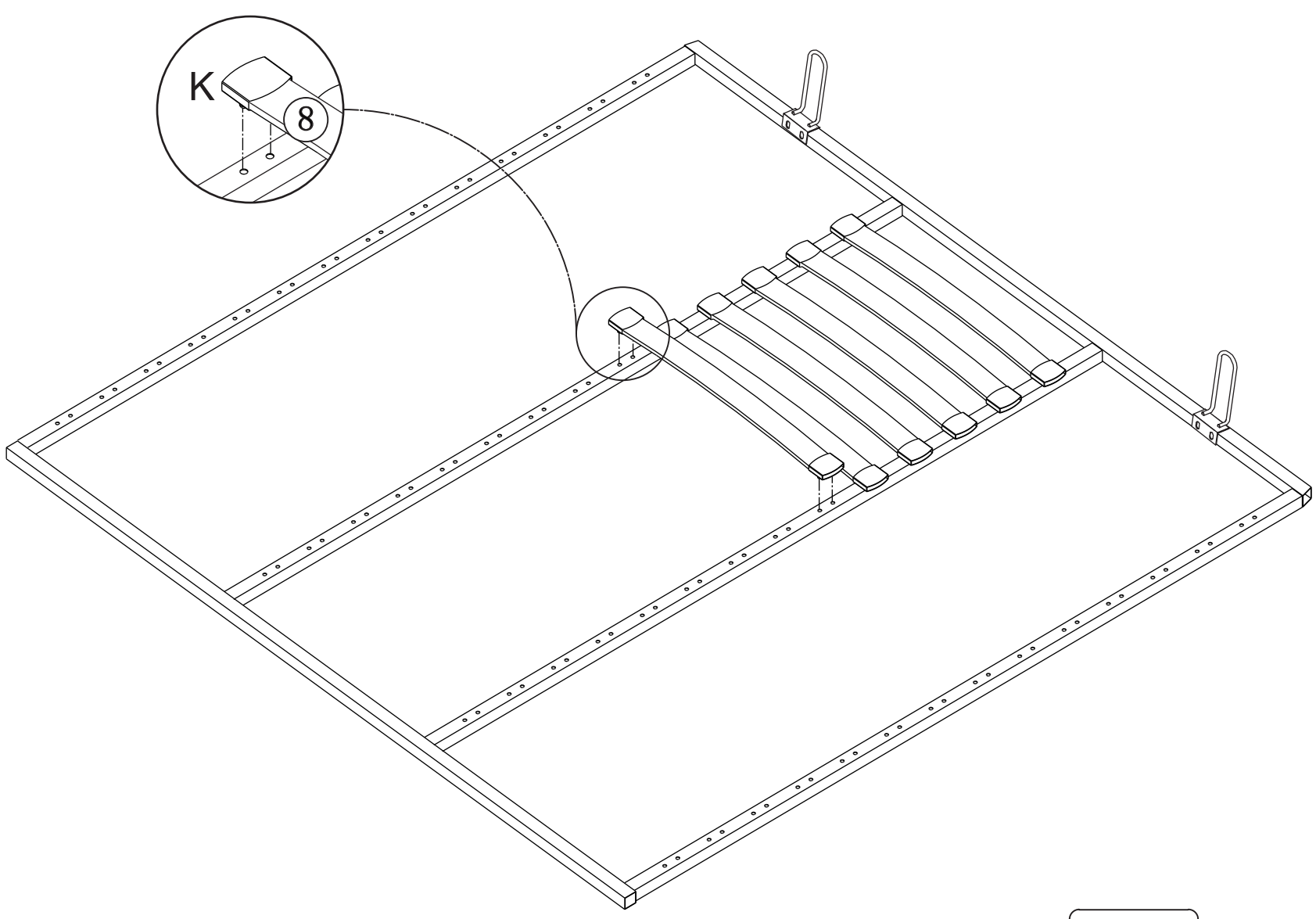

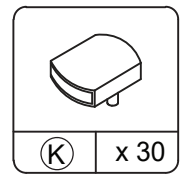



14

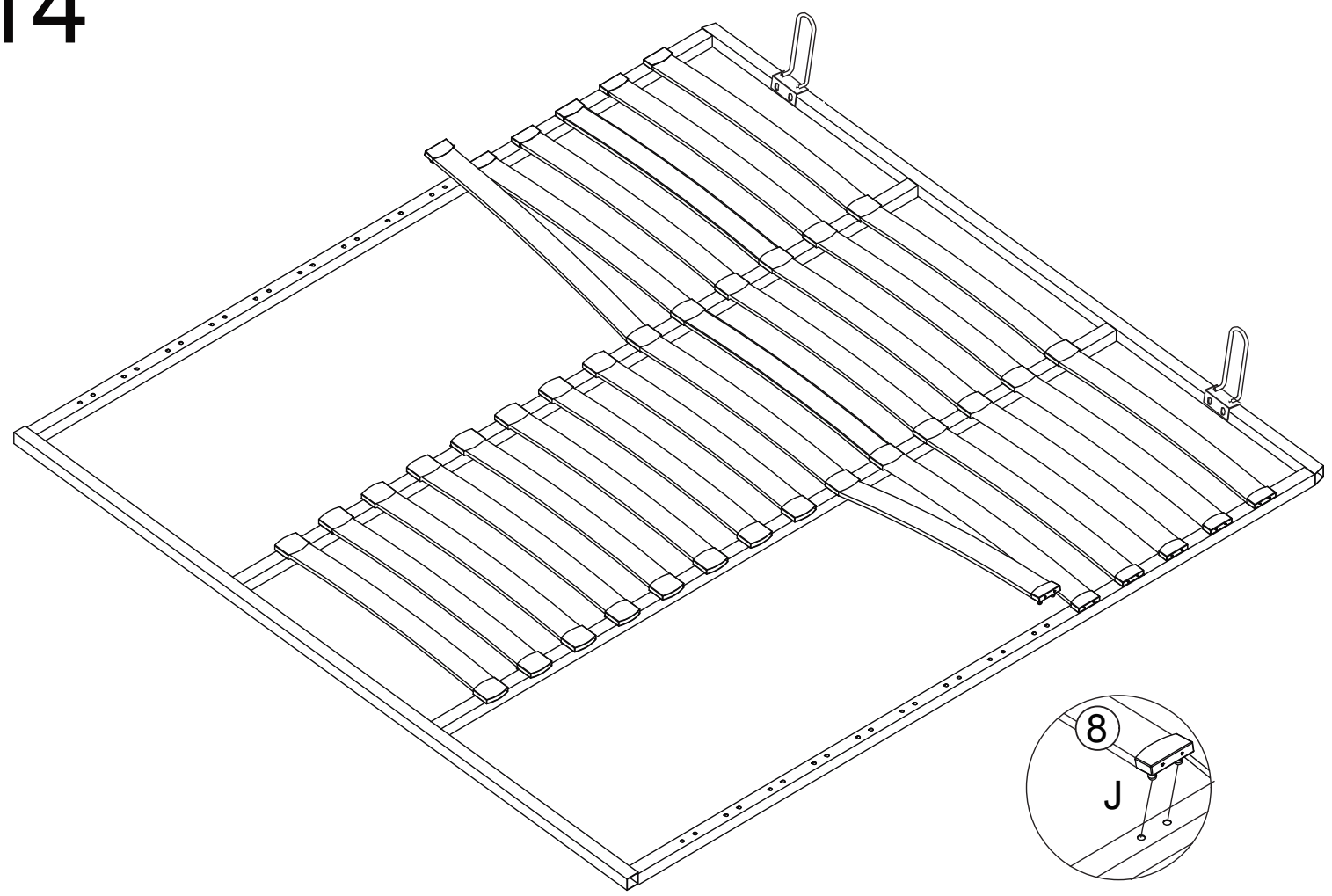

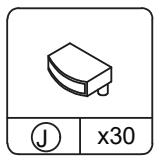

15

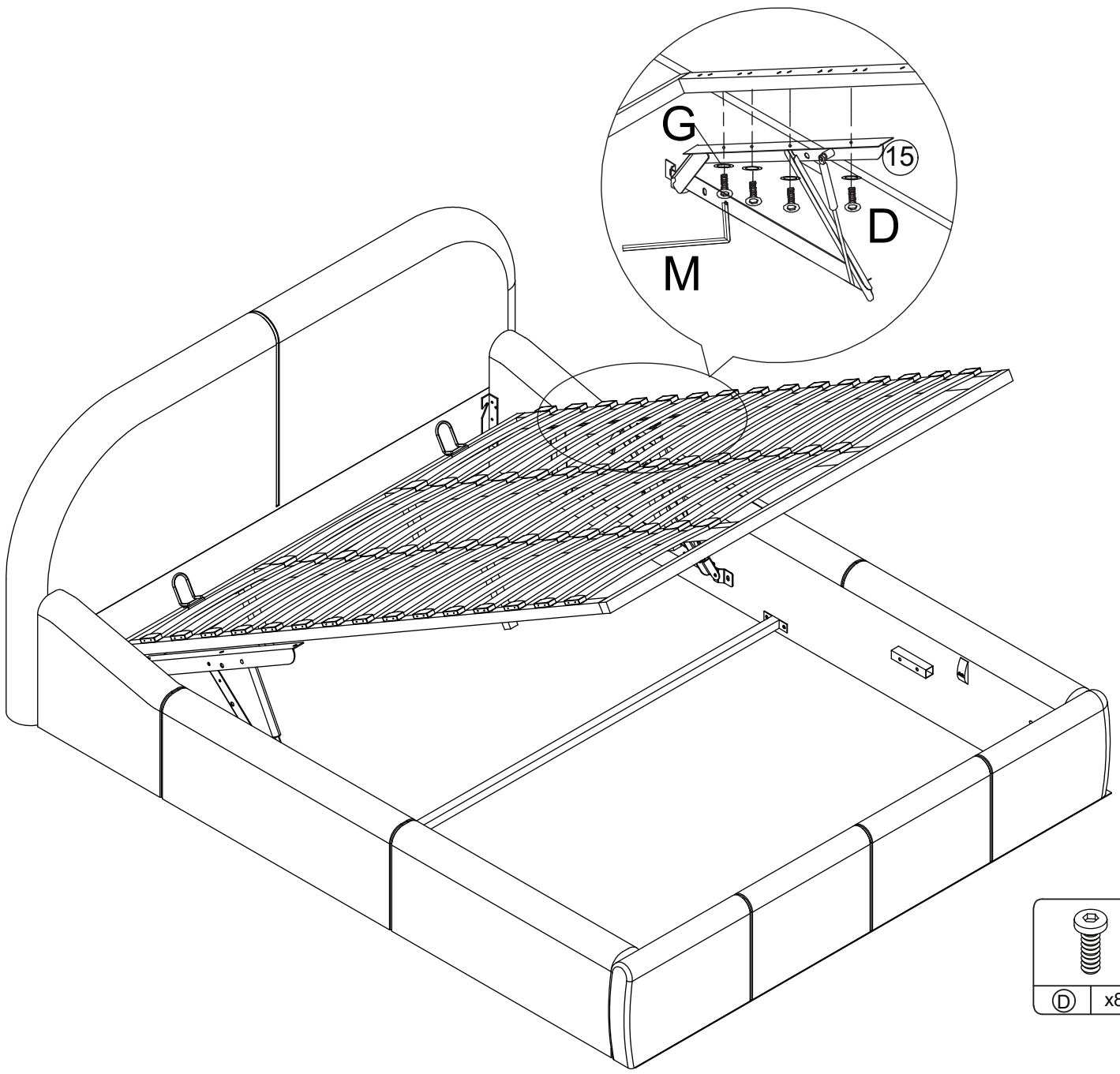

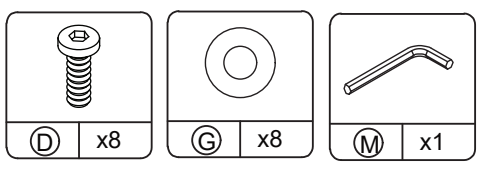



16

