BALI
16350075/01

MX Logistika SL, spol. s.r.o
Roznavska 32
82104 Bratislava 2-Ruzinov, Slovakia
E-Mail: info@moebelix.at

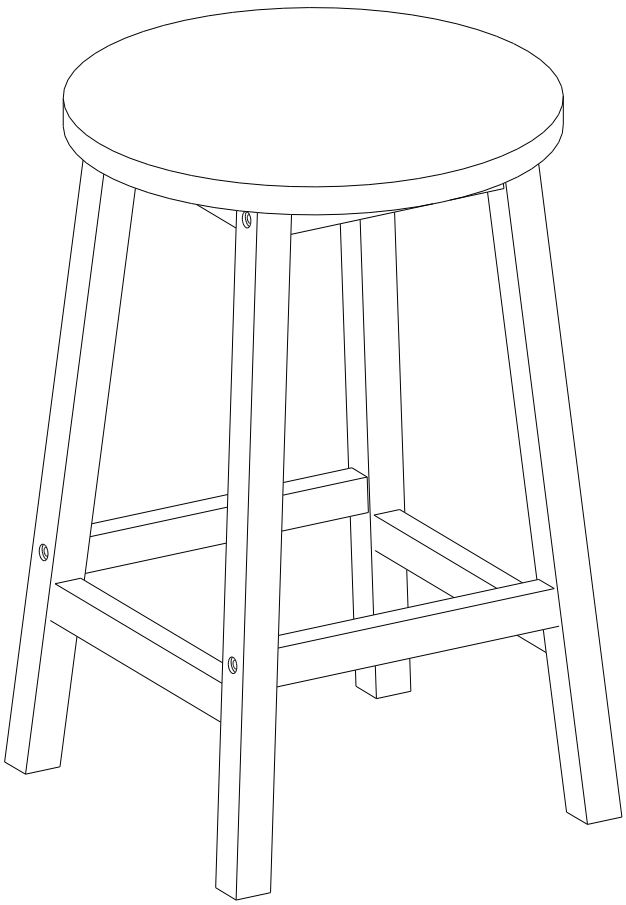

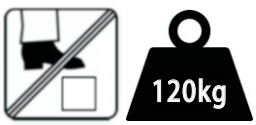

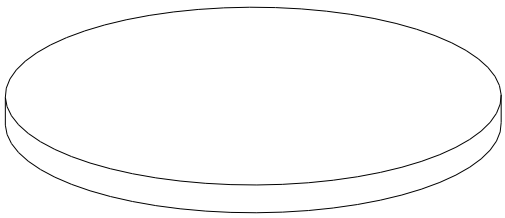

①x1

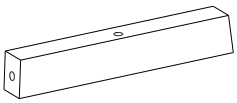

②x2

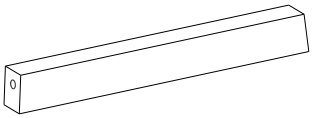

③x 2

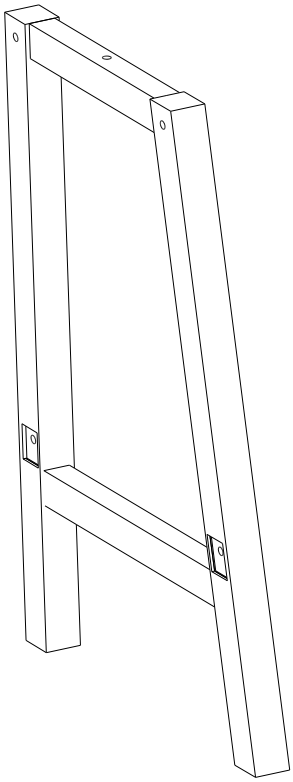

④x 2

Ax8	Bx4	Cx4	Dx1
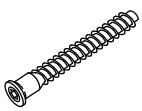			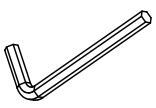
M6x40 mm	M7x30 mm	M20x3 mm	M4

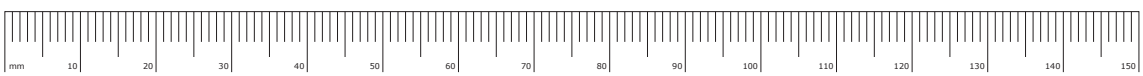

1


Bx4


Dx1

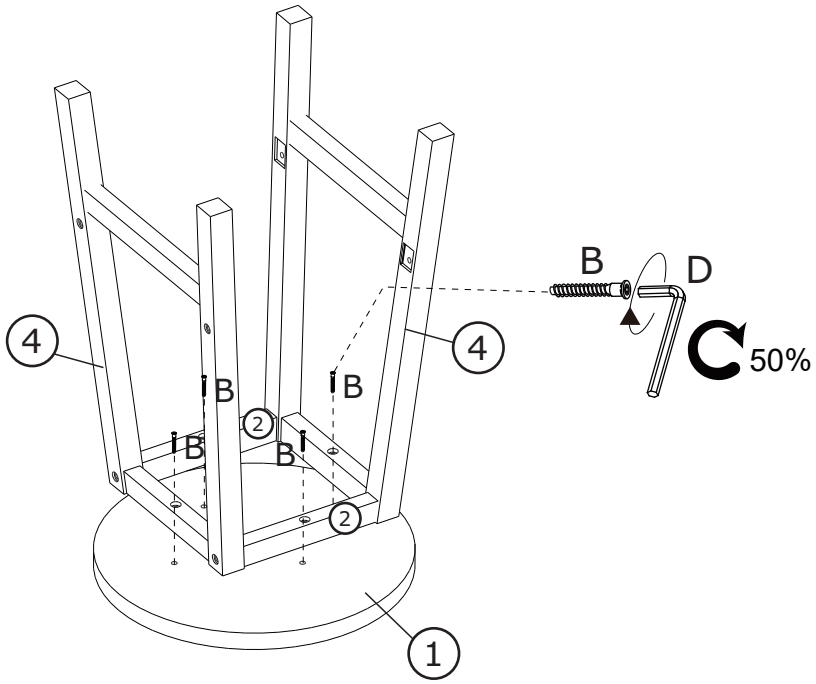

2


Ax8


Dx1

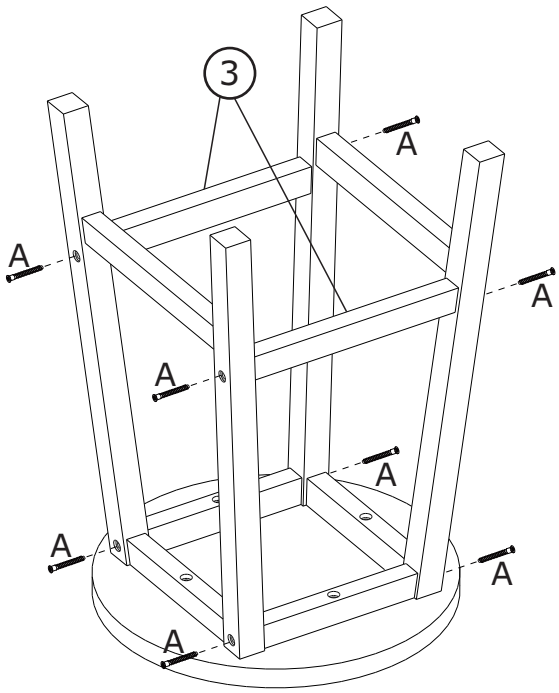

3

Cx4

Dx1

