A

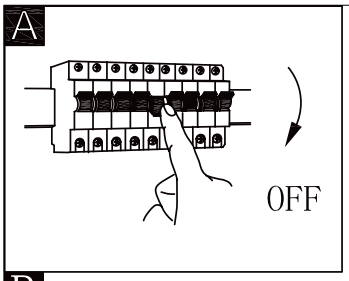
OFF

B

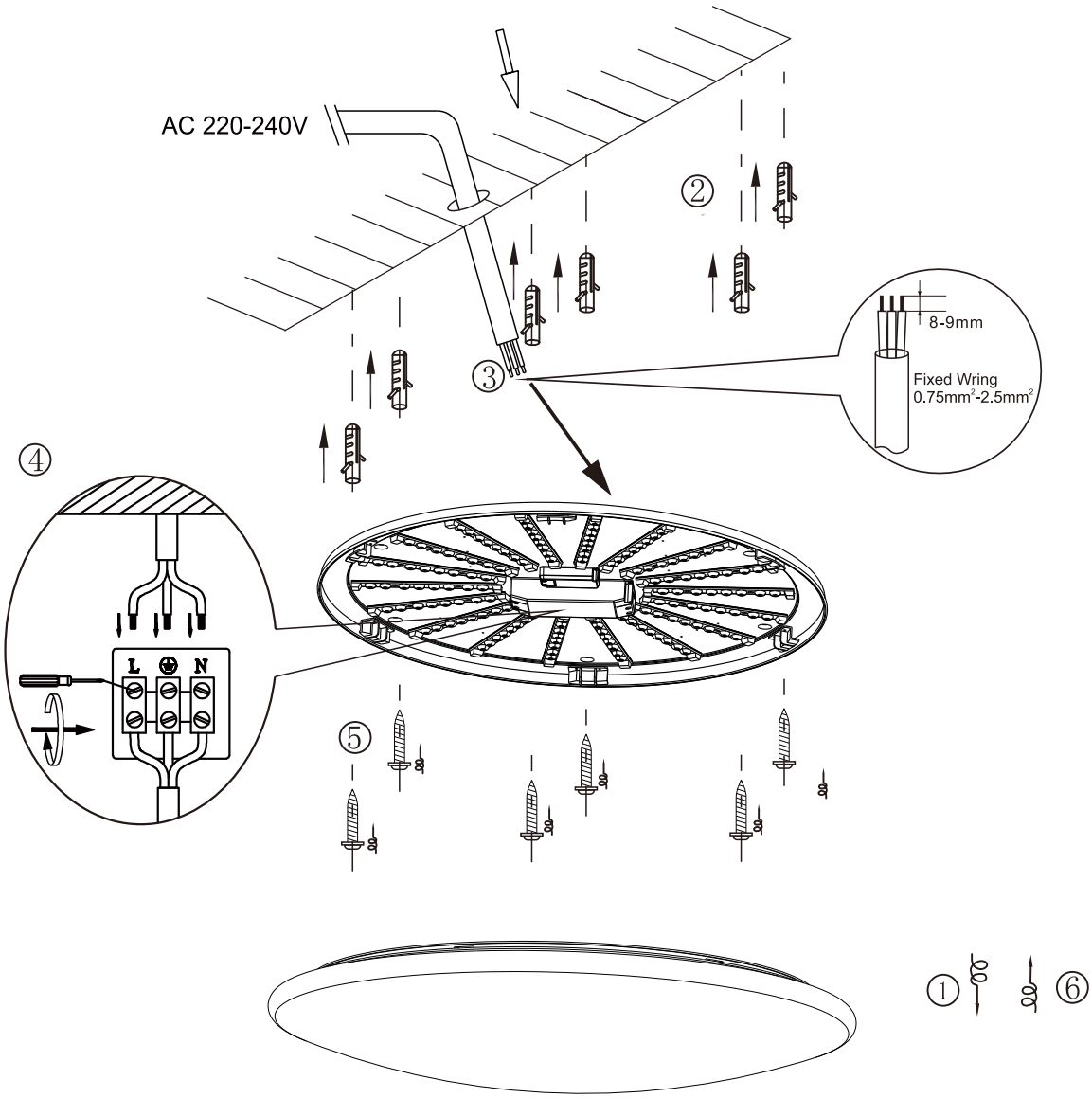
AC 220-240V
②
③
8-9mm
Fixed Wring
0.75mm²-2.5mm²
④
L
N
⑤
①
⑥

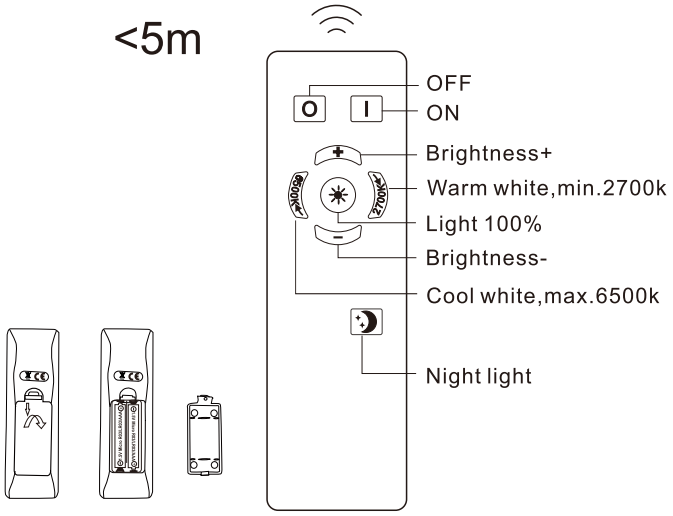
<5m
OFF
ON
Brightness+
Warm white,min.2700k
Light 100%
Brightness-
Cool white,max.6500k
Night light

C

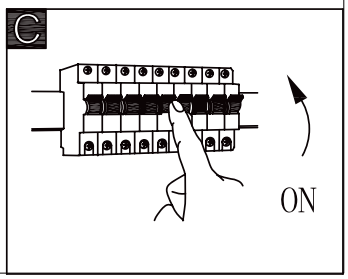
ON