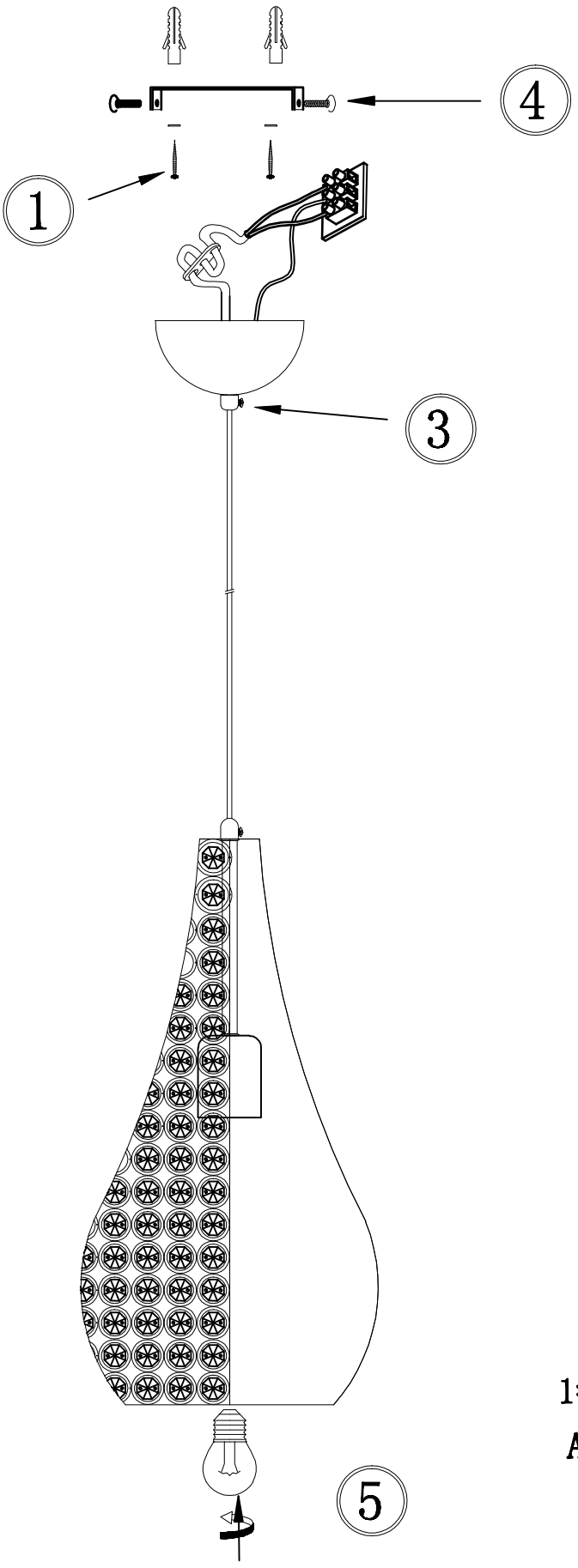

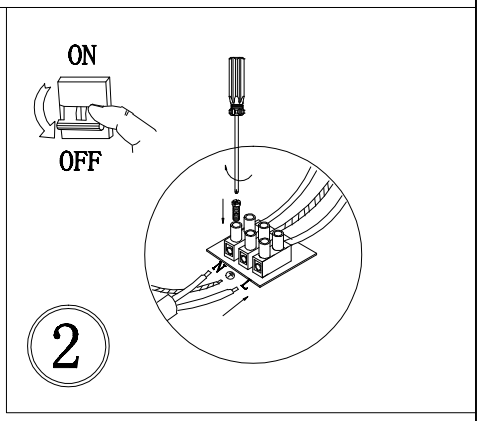

1*E27 MAX 60W

Article no:47190003