82270562

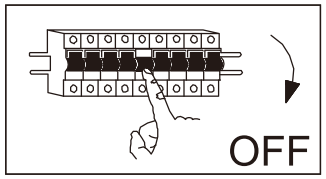

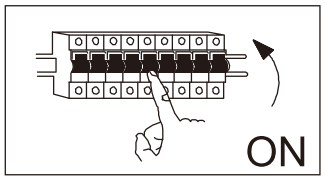

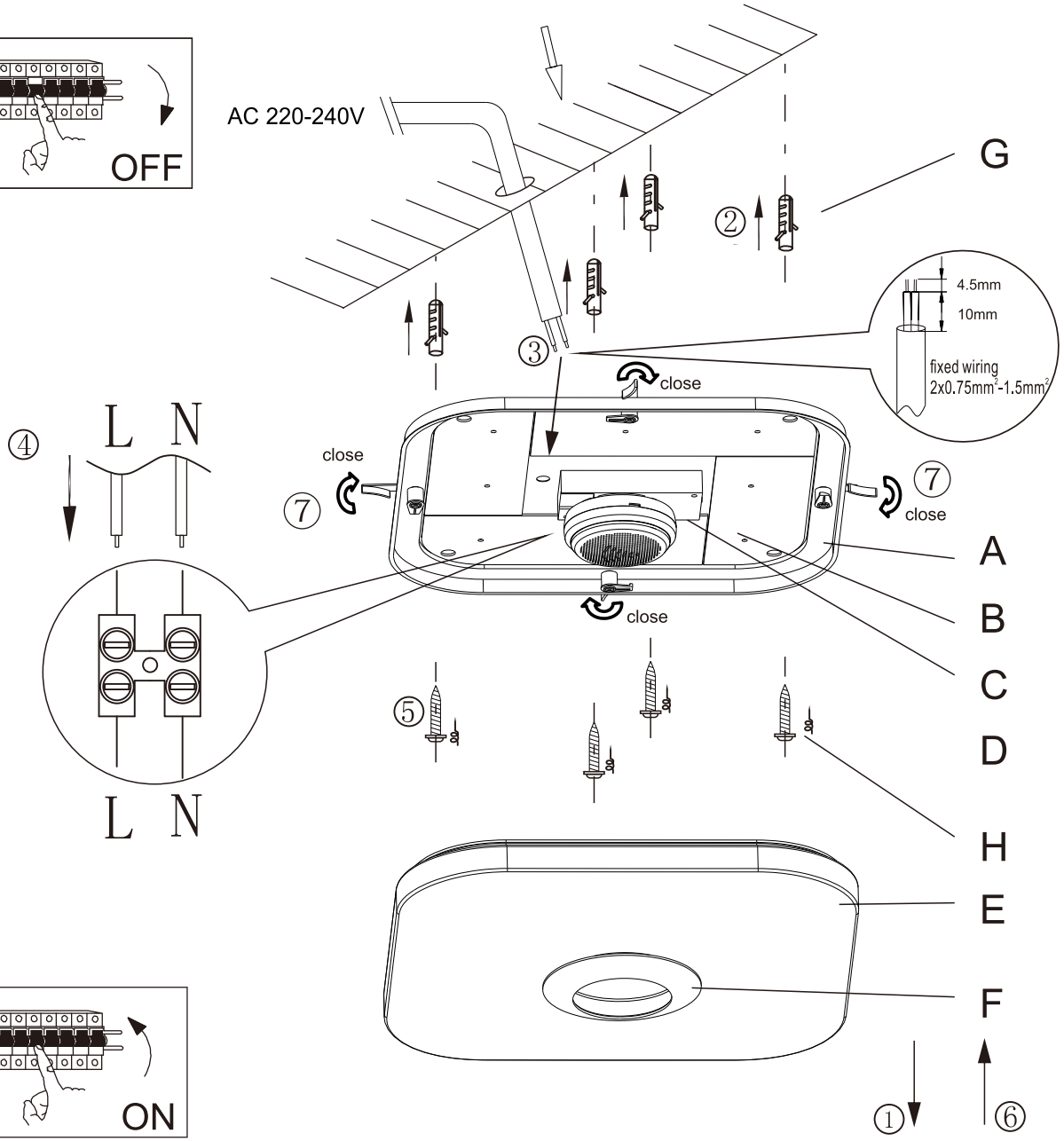

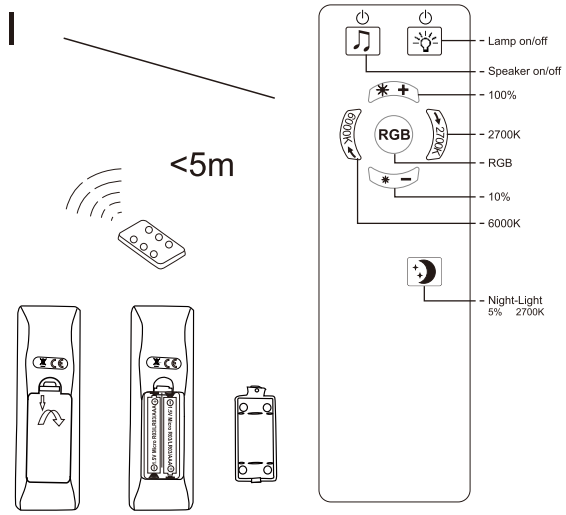

spare parts

code	part	pcs
B		x4
C	LED Driver	x1
D		x1
E		x1
F		x1
G		x4
H		x4