UEBE 110
Varianto

Montageanleitung /
Notice de montage /
Assembly instruction

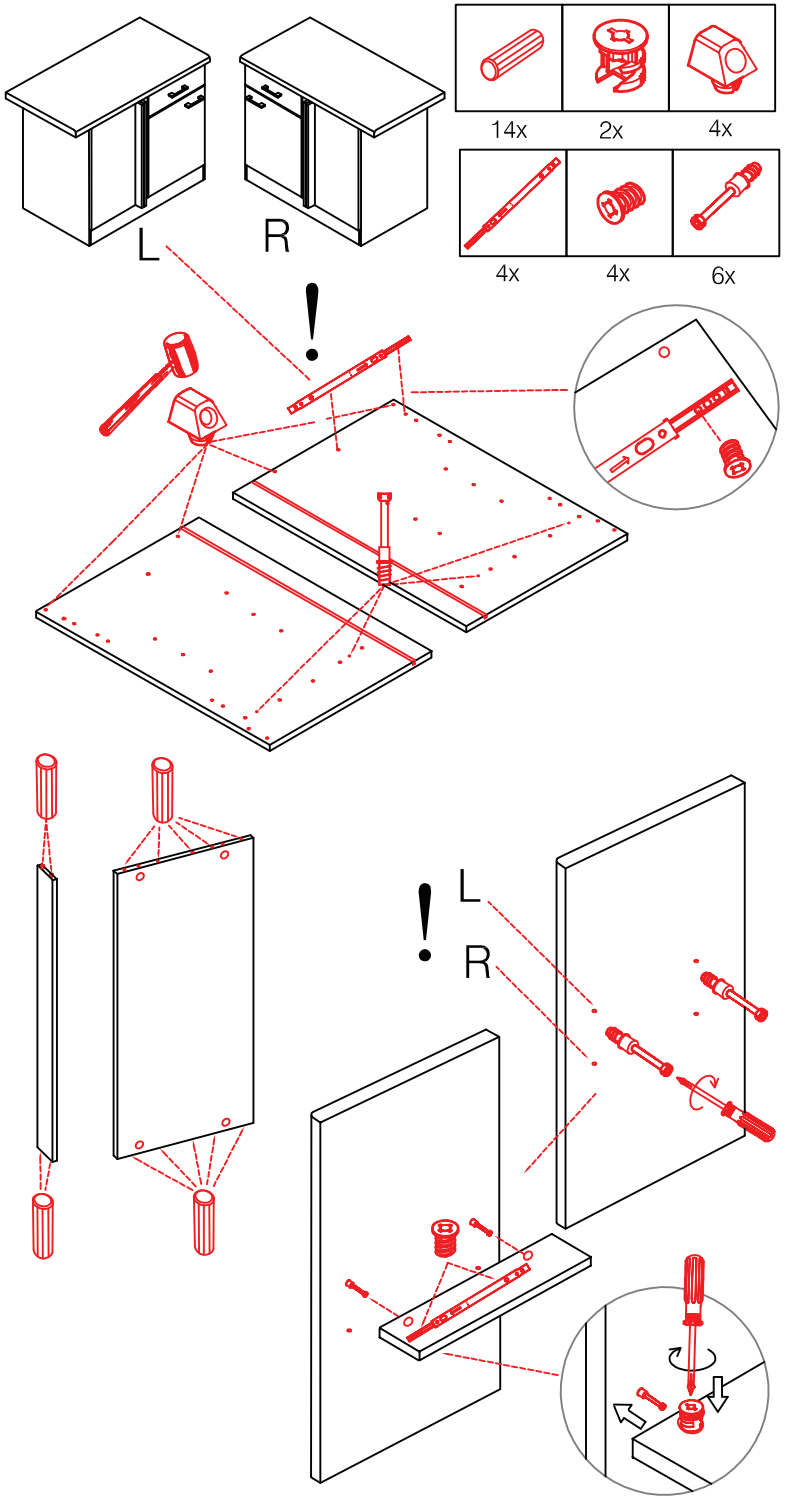

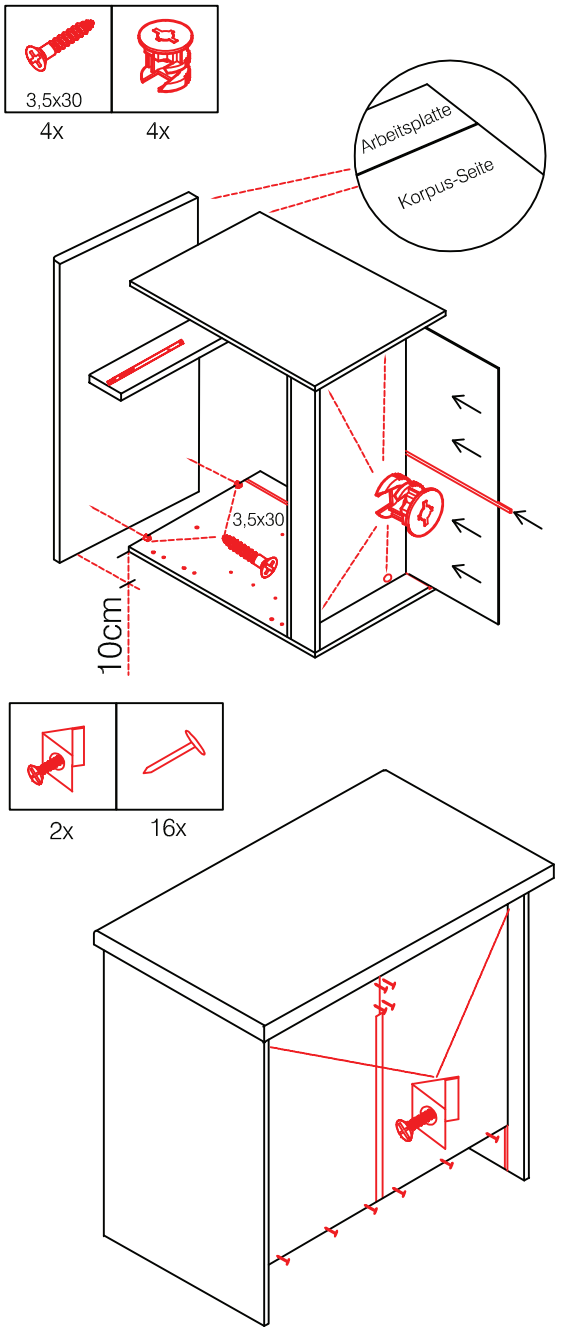

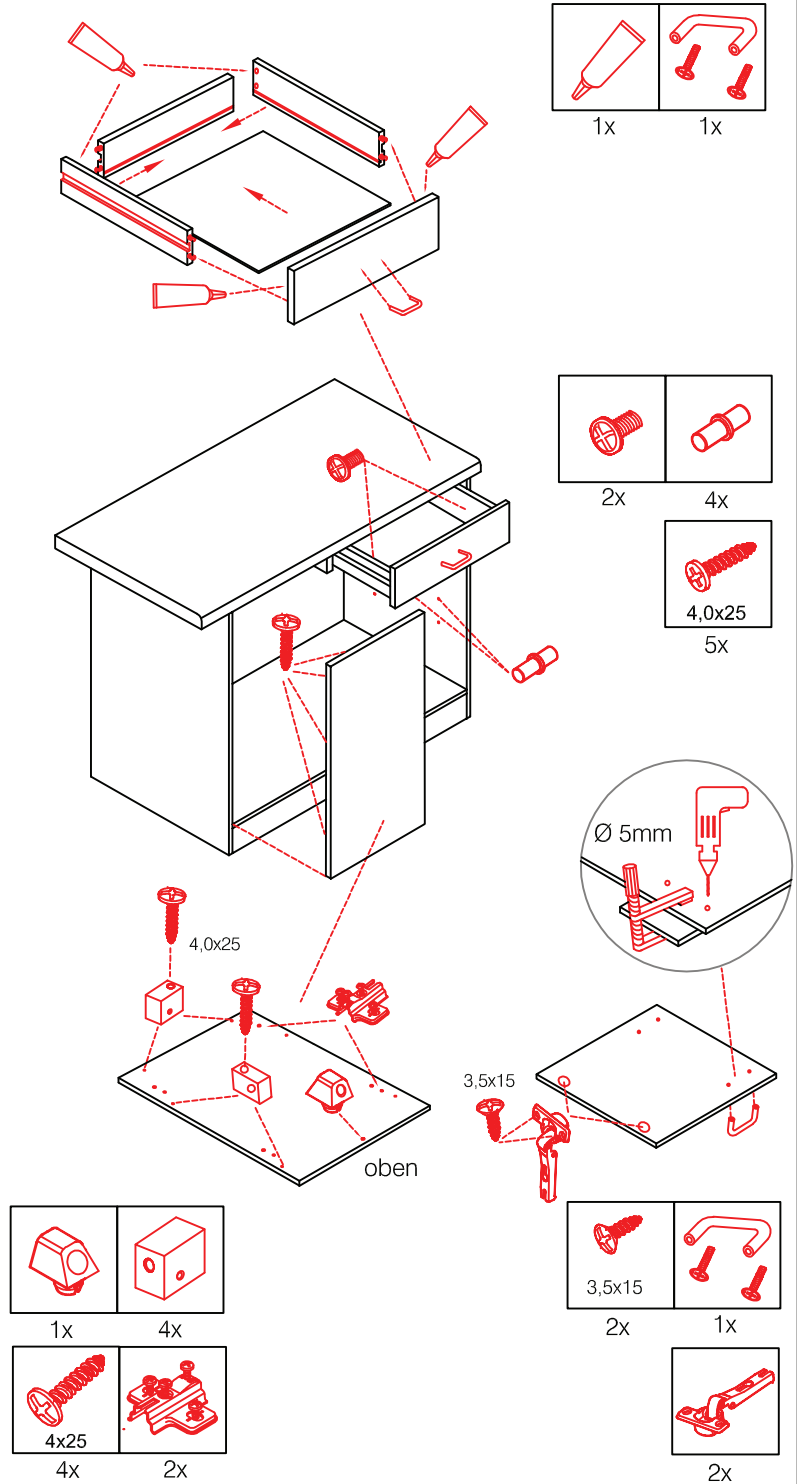

UEBE 110
Varianto
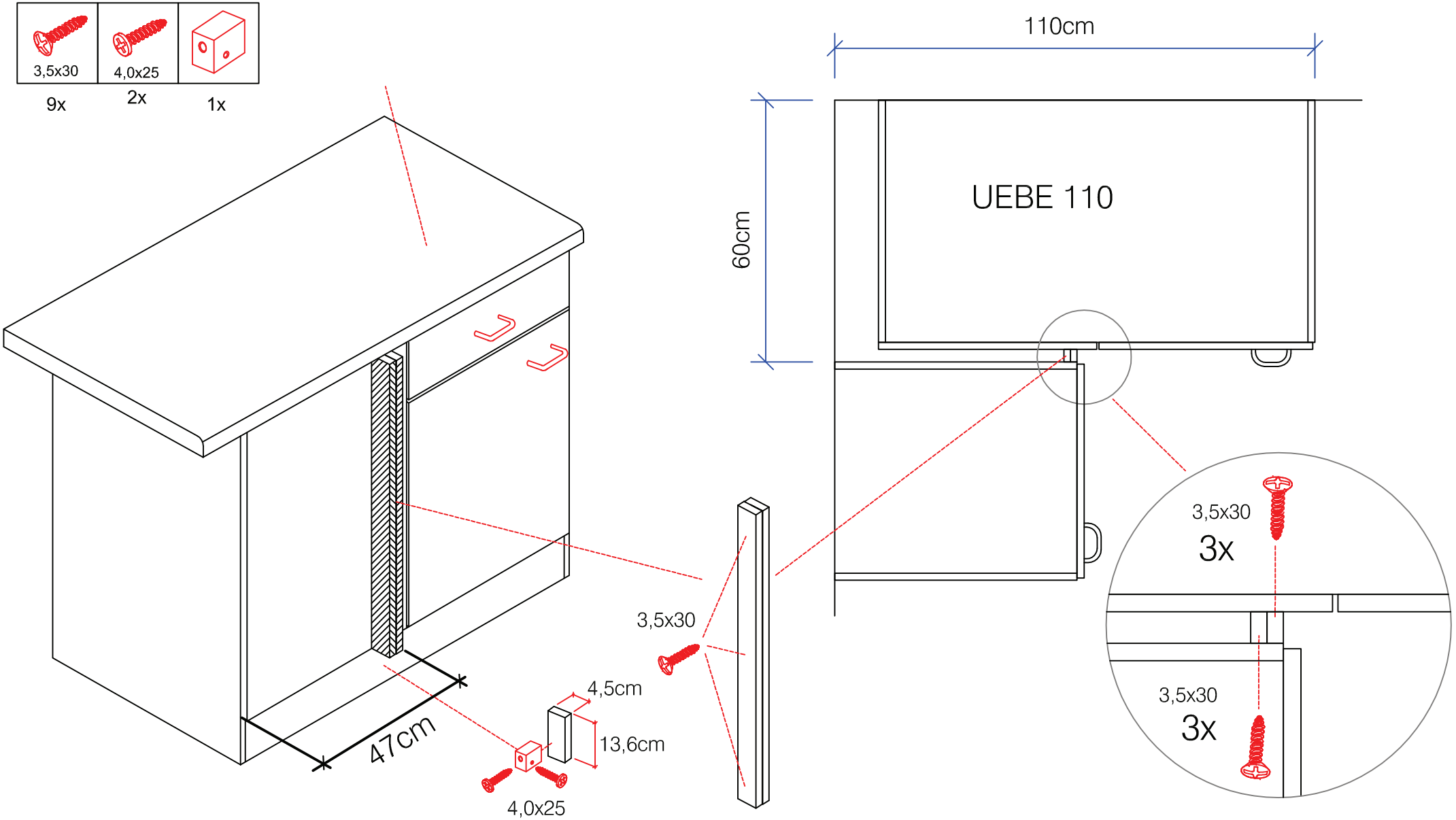
Montageanleitung / Notice de montage / Assembly instruction